TEKTRONIX®

7313/R7313
OSCILLOSCOPE

WITH OPTIONS

SERVICE

INSTRUCTION MANUAL

Tektronix, Inc.
P.O. Box 500
Beaverton, Oregon 97005

Serial Number _____

070-1363-00

First Printing JULY 1974

http://manoman.sqhill.com

WARRANTY

All TEKTRONIX instruments are warranted against defective materials and workmanship for one year. Any questions with respect to the warranty should be taken up with your TEKTRONIX Field Engineer or representative.

All requests for repairs and replacement parts should be directed to the TEKTRONIX Field Office or representative in your area. This will assure you the fastest possible service. Please include the instrument Type Number or Part Number and Serial Number with all requests for parts or service.

Specifications and price change privileges reserved.

Copyright © 1974 by Tektronix, Inc., Beaverton, Oregon. Printed in the United States of America. All rights reserved. Contents of this publication may not be reproduced in any form without permission of Tektronix, Inc.

U.S.A. and foreign TEKTRONIX products covered by U.S. and foreign patents and/or patents pending.

TEKTRONIX is a registered trademark of Tektronix, Inc.

http://manoman.sqhill.com

TABLE OF CONTENTS

		Page
	LIST OF ILLUSTRATIONS	iii
	LIST OF TABLES	v
SECTION 1	OPERATING INFORMATION	
	Preliminary Operation	1-1
	Safety Information	1-1
	Operating Voltage	1-1
	Plug-In Units	1-2
	Installation	1-2
	Controls and Connectors	1-3
	External	1-3
	Internal	1-3
SECTION 2	CIRCUIT DESCRIPTION	
	Block Diagram Description	2-1
	Logic Fundamentals	2-1
	Symbols	2-3
	Logic Polarity	2-3
	Input/Output Tables	2-3
	Non-Digital Devices	2-3
	Circuit Operation	2-6
	Main Interface 1	2-6
	Logic 2	2-6
	Z-Axis Logic	2-6
	Clock Generator	2-9
	Vertical Chopped Blanking	2-10
	Chop Counter	2-11
	Vertical Mode Control	2-12
	Vertical Binary	2-13
	Plug-In Binary	2-15
	Output Buffers	2-15
	Trigger Selector 3 7	2-16
	Trigger Mode and Add Signals	2-16
	Trigger Channel Switch	2-16
	Trigger Output Amplifier	2-18
	Vertical Interface 3	2-18
	Vertical Channel Switch	2-18
	Auxiliary Y-Axis Input Amplifier	2-20
	Delay Line Driver	2-20
	Delay Line	2-20

		Page
SECTION 2	CIRCUIT DESCRIPTION (cont)	
	Vertical Amplifier 4	2-20
	Input Amplifier	2-20
	Beamfinder Network	2-20
	Output Amplifier	2-21
	Horizontal Amplifier 5	2-21
	Horizontal Channel Switch	2-22
	Output Amplifier	2-22
	Output Signals 6	2-22
	Vert Sig Out	2-22
	+Sawtooth Out	2-22
	+Gate Out	2-22
	Calibrator and Front Panel Switching 7	2-22
	Mode Switch Logic	2-23
	Calibrator	2-23
	Output Amplifier	2-23
	Output Voltage Divider	2-23
	CRT Circuit 8	2-24
	Z-Axis Amplifier	2-24
	High Voltage Oscillator	2-24
	High Voltage Regulator	2-25
	Voltage Supplies	2-25
	Focus Amplifier and Focus Grid DC Restorer	2-25
	Control Grid DC Restorer	2-26
	CRT Control Circuits	2-26
	Low Voltage Power Supply 9	2-26
	Power Input	2-27
	−50 Volt Supply	2-27
	−15 Volt Supply	2-30
	+5 Volt Supply	2-30
	+15 Volt Supply	2-30
	+50 Volt Supply	2-30
	+130 Volt Supply	2-30
	Graticule Light Supply	2-31
	Storage Circuit 10	2-31
	Storage Tube Basic Operating Principles	2-31
	Flood Guns and Collimation Electrodes	2-34
	Target Control Amplifiers	2-34

http://manoman.sqhill.com

TABLE OF CONTENTS (cont)

SECTION 2 CIRCUIT DESCRIPTION (cont)	Page
Erase Generator	2-34
Auto Erase Generator	2-35
Enhance Generator	2-35
Readout System (11)	2-36
Circuit Analysis of Readout System	2-39

SECTION 3 MAINTENANCE	
Panel Removal	3-1
Power Unit Removal	3-1
Preventive Maintenance	3-2
Cleaning	3-2
Lubrication	3-3
Visual Inspection	3-3
Semiconductor Checks	3-3
Recalibration	3-3
Troubleshooting	3-3
Troubleshooting Equipment	3-3
Troubleshooting Techniques	3-4
Corrective Maintenance	3-8
Obtaining Replacement Parts	3-8
Soldering Techniques	3-8
Component Replacement	3-8
Recalibration After Repair	3-13

SECTION 4 CALIBRATION	
Calibration Interval	4-1
Tektronix Field Service	4-1
Using This Procedure	4-1
Test Equipment Required	4-1
Special Calibration Fixtures	4-1
Calibration Equipment Alternatives	4-1
Signal Connections	4-2
Calibration Procedure	4-5
Index to Calibration Procedure	4-5
Setup Procedure	4-6
Preliminary Control Settings	4-6

SECTION 4 CALIBRATION (cont)	Page
Power Supply	4-7
Display and Z-Axis	4-8
Vertical Deflection System	4-11
Triggering System	4-14
Horizontal Deflection System	4-15
Calibrator and Signals In/Out	4-18
Readout System	4-21
Storage System	4-22

SECTION 5 INSTRUMENT OPTIONS	
Option 1	5-1
Option 3	5-1
Option 5 (Rackmount instruments only)	5-1
Option 7	5-1

SECTION 6 ELECTRICAL PARTS LIST

SECTION 7 DIAGRAMS AND CIRCUIT BOARD ILLUSTRATIONS

SECTION 8 MECHANICAL PARTS LIST

CHANGE INFORMATION

NOTE

Refer to the 7313/R7313 Operators manual for complete operating information, specifications, and rackmounting instructions.

http://manoman.sqhill.com

LIST OF ILLUSTRATIONS

Number		Page
	Frontispiece	
1-1	Locations of voltage selector, spare jumper, and alternate fuse in power unit (7313 shown).	1-2
1-2	Front-panel controls and connectors.	1-4
1-3	Rear-panel controls and connectors.	1-5
1-4	Location and function of internal selectors.	1-6
2-1	Basic block diagram of 7313/R7313 Oscilloscope.	2-2
2-2	Logic circuit detailed block diagram.	2-7
2-3	Simplified schematic of Z-Axis Logic Stage.	2-8
2-4	(A) Diagram of Clock Generator stage. (B) Idealized waveforms from Clock Generator stage.	2-9
2-5	Idealized waveform for Vertical Chopped Blanking stage.	2-10
2-6	(A) Logic diagram for Vertical Chopped Blanking stage. (B) Table of input/output combinations for Vertical Chopped Blanking stage.	2-12
2-7	Detailed logic diagram of Chop Counter stage.	2-13
2-8	Idealized input and output waveforms for Chop Counter stage.	2-13
2-9	Logic diagram of Vertical Mode Control and Vertical Mode Buffer Amplifier stages.	2-14
2-10	Logic diagram of Vertical Binary stage.	2-14
2-11	Idealized waveforms showing relationship between input and output waveforms for Vertical Binary and Plug-In Binary stages when operating in the ALT mode.	2-15
2-12	Logic diagram of Plug-In Binary and Plug-In Alternate buffer stages.	2-16
2-13	Detailed block diagram of Trigger Selector circuit and simplified diagram of Trigger Source Selector circuits.	2-17
2-14	Input levels at pin 4 of U324 (source of triggering signal is shown in parenthesis).	2-18
2-15	Input/output table for Trigger Channel switch stage (U324).	2-18
2-16	Vertical Interface detailed block diagram.	2-19
2-17	Input/output table for Vertical Channel Switch stage (U214).	2-19
2-18	Vertical Amplifier detailed block diagram.	2-20
2-19	Horizontal Amplifier detailed block diagram.	2-21
2-20	Calibrator detailed block diagram.	2-23
2-21	Cathode-Ray Tube circuit detailed block diagram.	2-24
2-22	Low Voltage Power Supply detailed block diagram.	2-28
2-23	Schematic illustrating voltage drop between power supply output and load due to resistance of interconnecting wire.	2-30
2-24	Storage circuit detailed block diagram.	2-32
2-25	Pictorial diagram of storage cathode-ray tube.	2-33

http://manoman.sqhill.com

LIST OF ILLUSTRATIONS (cont)

Number		Page
2-26	Secondary emission curve.	2-33
2-27	Typical erase cycle waveform.	2-33
2-28	Location of Readout words on the cathode-ray tube identifying the originating plug-in and channel (one complete frame shown, simulated readout).	2-36
2-29	Character Selection Matrix for Readout System.	2-37
2-30	Typical Readout display where only channel 2 of the Right Vertical unit and Channel 2 of the Horizontal unit are displayed.	2-38
2-31	Detailed block diagram of the Readout System.	2-40
2-32	Output Waveforms of Timer Stage (U2126).	2-42
2-33	Detail of output at pins 12, 13, 14, and 16 of Timer Stage (U2126).	2-43
2-34	Timer stage output when Display-skip condition occurs (U2126).	2-44
2-35	Time relationship of time-slot (TS) pulses produced by U2159.	2-44
2-36	Typical encoding scheme for voltage-sensing plug-in unit. Coding shown for deflection factor of 100 microvolts.	2-46
2-37	Idealized current waveforms of (A) Row analog data. (B) Column analog data.	2-47
2-38	Block representation of memory sequence in U2232.	2-49
2-39	Typical output waveform for Zeroes Logic and Memory stage operation (pin 7 of U2232).	2-50
2-40	Readout word relating to possible character locations to the decimal point instructions that can be encoded and to the resultant cathode-ray tube display.	2-52
2-41	Flow chart for character generation by the Readout System.	2-53
3-1	7313/R7313 Troubleshooting chart.	3-6
4-1	Typical crt display when checking X-Y phase shift.	4-17

http://manoman.sqhill.com

LIST OF TABLES

Table		Page
1-1	Color Coding of Cord Conductors	1-1
1-2	Regulating Range and Fuse Data	1-2
2-1	Basic Logic Reference	2-3
2-2	Standard Readout Format	2-38
2-3	Channel Address Code	2-45
3-1	Power Supply Tolerance	3-4
3-2	Fuse Rating	3-13
4-1	Test Equipment	4-2
4-2	Power Supply Tolerance	4-7
4-3	High Frequency Compensation	4-12
5-1	Option Information Locator	5-1

http://manoman.sqhill.com

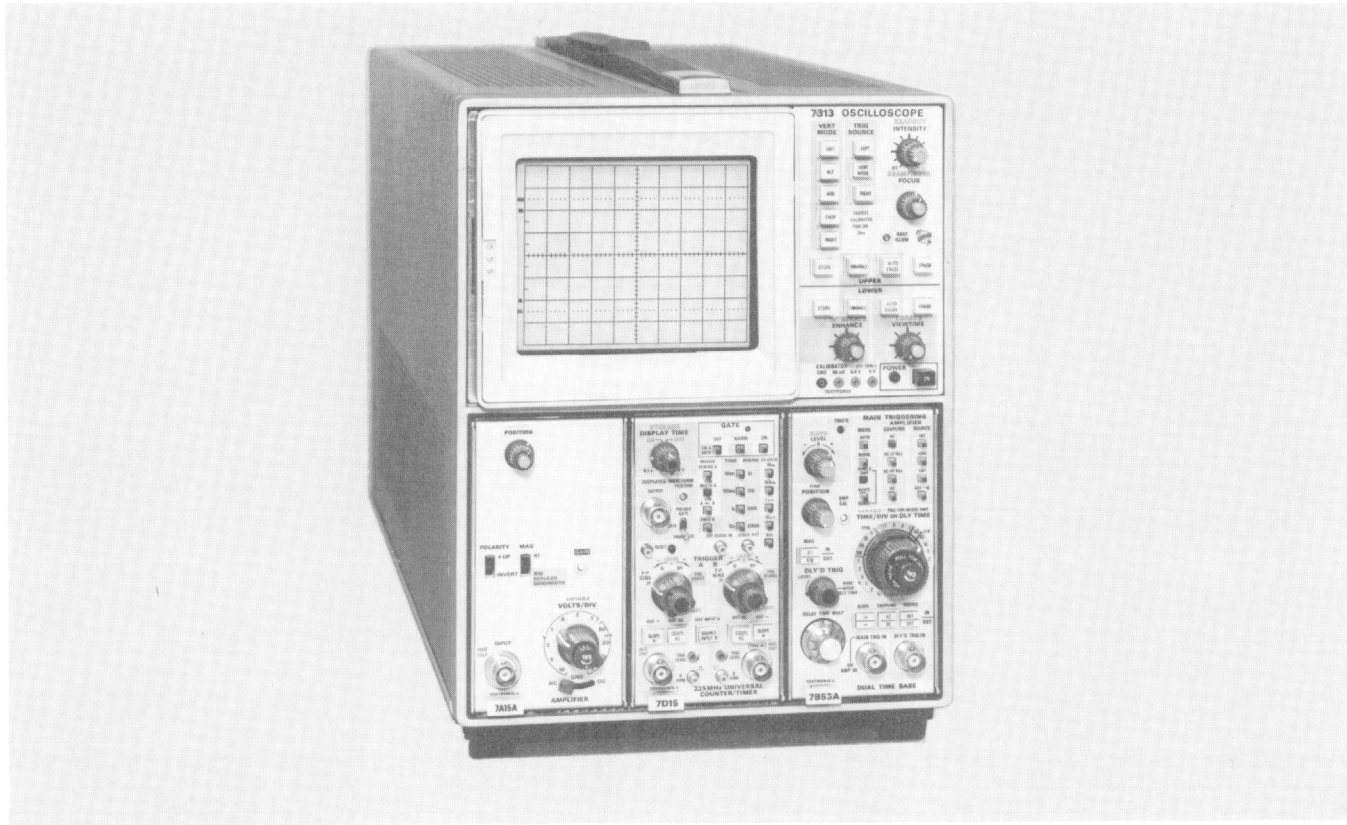

7313/R7313 FEATURES

The Tektronix 7313/R7313 Oscilloscope is a solid-state instrument designed for general-purpose application where display storage is desired along with high performance conventional (non-store) operation. This instrument has three plug-in compartments that accept Tektronix 7-Series plug-in units to form a complete measurement system. The two plug-in compartments on the left are connected to the vertical deflection system. The right plug-in compartment is connected to the horizontal deflection system. Electronic switching between the vertical plug-in compartments allow a multi-trace vertical display. The flexibility of this plug-in feature and the variety of plug-in units available allow this system to be used for many applications.

The cathode ray tube is a direct view, bi-stable storage tube having an 8 x 10 division display area divided into two 4 x 10 division storage screens. The storage screens are independently controlled for split screen applications. A non-storing area to the left of the storage screens permits beam location without disturbing a stored display. Regulated dc power supplies assure that performance is not affected by variations in line voltage and frequency, or by changes in load due to varying power requirements of the plug-in units. The 7313/R7313 operates from a 115 volt or a 230 volt nominal line voltage source.

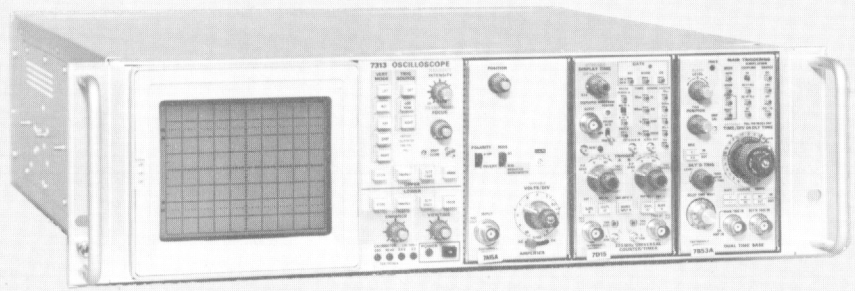

http://manoman.sqhill.com

OPERATING INFORMATION

To effectively use the 7313/R7313 Oscilloscope, the operation and capabilities of the instrument must be known. This section briefly describes the operation of controls and connectors and provides preliminary operating information. Refer to the 7313/R7313 Operators manual for detailed operating instructions.

PRELIMINARY OPERATION

Safety Information

This instruction manual contains informative and warning text which the user must follow to ensure safe operation and to retain the instrument in safe condition.

AC Power Sources. This instrument is intended to be operated from a single-phase earth-referenced power source having one current-carrying conductor (the Neutral Conductor) near earth potential. Operation from power sources where both current-carrying conductors are live with respect to earth (such as phase-to-phase on a three-wire system) is not recommended, since only the Line Conductor has over-current (fuse) protection within the instrument.

AC Power Cord. This instrument has a three-wire power cord with a three-terminal polarized plug for connection to the power source and safety earth. The safety-earth terminal of the plug is directly connected to the instrument frame. For electric-shock protection, insert this plug only in a mating outlet with a safety-earth contact, or otherwise connect the frame to a safety-earth system. The color-coding of the cord conductors is in accordance with recognized standards as shown in Table 1-1.

TABLE 1-1

Color Coding of Cord Conductors

NOTE

The power cord on Tektronix instruments may conform to either of the following two electrical codes:

Conductor	*USA (NEC) & Canada*	*IEC*
Line	*Black*	*Brown*
Neutral	*White*	*Light Blue**
Safety-Earth	*Green w/yellow stripe*	*Green w/yellow stripe*

*Tinned copper conductor.

Operating Voltage

The 7313/R7313 can be operated from either a 110-volt or a 220-volt nominal line-voltage source. In addition, three operating ranges can be selected within each nominal line voltage source. Use the following procedure to obtain correct instrument operation from the line voltage available:

1. Disconnect the instrument from the power source.

2. To gain access to the voltage selector jumper, perform the applicable procedure which follows:

7313. Remove three screws from each side of the power unit. Slide the power unit out the rear of the chassis (see Fig. 1-1).

R7313. Remove the top cover and remove the power unit from the rear of the instrument. See Power Unit Removal in the Maintenance section.

CAUTION

This instrument may be damaged if operated with the Line Selector set to the incorrect positions for the line voltage applied.

3. To convert from 110-volts to 220-volts nominal line voltage, or vice versa, remove the voltage-selector jumper and replace it with the spare jumper stored on the pins adjacent to voltage selector area (see Fig. 1-1). The jumpers are color coded to indicate the nominal voltage for which they are intended; brown for 110-volt nominal operation and red for 220-volt nominal operation. Change the rear-panel fuse to provide protection for the selected nominal line voltage. Use the fuse located in the Alt Fuse holder on the Rectifier board (see Fig. 1-1 for location and Table 1-2 for fuse type). Also change the line-cord plug to match the power-source receptacle or use a suitable adapter.

4. To convert the instrument from one regulating range to another, remove the voltage selected jumper and re-install it on the set of pins that represents the desired regulating range. Select a range which is centered about the average line voltage to which the instrument is to be connected (see Table 1-2).

http://manoman.sqhill.com

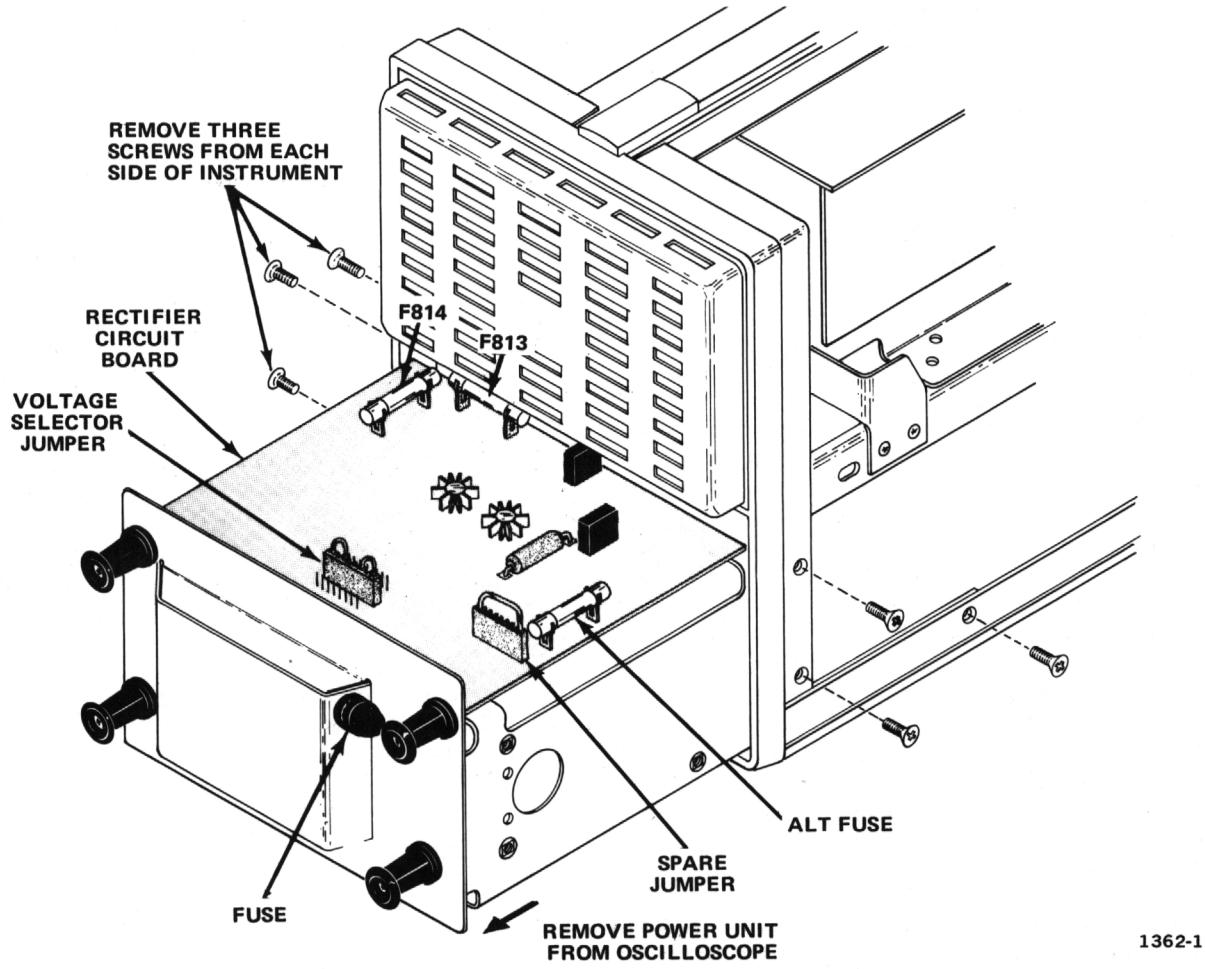

Fig. 1-1. Locations of voltage selector, spare jumper, and alternate fuse in power unit (7313 shown).

TABLE 1-2

Regulating Range and Fuse Data

Pins Selected	Regulating Range	
	110-volts nominal	220-volts nominal
LOW	90 to 110 volts	180 to 220 volts
MED	99 to 121 volts	198 to 242 volts
HI	108 to 132 volts	216 to 264 volts
Line Fuse	3.2 A slow-blow	1.6 A slow-blow

PLUG-IN UNITS

The 7313/R7313 is designed to accept up to three Tektronix 7-series plug-in units. This plug-in feature allows a variety of display combinations and also allows selection of polarity, sensitivity, display mode, etc. to meet the measurement requirements. In addition, it allows the oscilloscope system to be expanded to meet future measurement requirements. The overall capabilities of the resultant system are in large part determined by the characteristics of the plug-in selected. Refer to the Tektronix Products catalog for specifications of plug-in units currently available.

Installation

To install a plug-in unit into one of the plug-in compartments, align the slots in the top and bottom of the plug-in unit with the associated guide rails in the plug-in compartment. Push the plug-in unit firmly into the plug-in compartment until it locks into place. To remove a plug-in, pull the release latch on the plug-in unit to disengage it and pull the unit out of the plug-in compartment. Plug-in units can be removed or installed without turning off the instrument power.

All of the plug-in compartments do not have to be filled to operate the instrument; the only plug-ins needed are those required for the measurement to be made. At

http://manoman.sqhill.com

environmental extremes, excess interference may be radiated into or out of the instrument through the plug-in compartments. To reduce such interference, or to meet EMI specifications on factory equipped Option 3 or field EMI modified instruments, all unused plug-in compartments must be covered with an EMI shielded blank plug-in panel. Order or use only Tektronix Part No. 016-0155-00. One is required for each unused compartment.

When the 7313/R7313 is calibrated in accordance with the calibration procedure given in this instruction manual, the vertical and horizontal gains are normalized. This allows calibrated plug-in units to be changed from one plug-in compartment to another without recalibration. However, the basic calibration of the individual plug-in units should be checked when they are installed in this system to verify their measurement accuracy. See the operating instructions section of the plug-in unit instruction manual for verification procedure.

The plug-in versatility of the 7313/R7313 allows a variety of display modes with many different plug-in units. The following information is provided to aid in plug-in unit selection.

To produce a single-trace display, install a single-channel vertical unit (or dual-channel unit set for single-channel operation) in either of the vertical compartments; for dual-trace displays, either install a dual-channel vertical unit in one of the vertical compartments or install a single-channel vertical unit in each vertical compartment. A combination of a single-channel and dual-channel vertical unit allows a three-trace display; likewise, a combination of two dual-channel vertical units allows a four-trace display.

Non-delayed single-trace displays can be obtained with a single-trace time-base unit. A dual-trace time-base unit must be used for delayed-sweep displays.

X-Y displays can be obtained in two ways with the 7313/R7313 system. If a 7B-series time-base unit is available that has an amplifier feature, the X signal can either be routed through one of the vertical units via the internal-trigger pickoff circuitry to the horizontal system, or connected to the external horizontal input connector of the time-base unit. Then, the vertical signal (Y) is connected to the remaining vertical unit. Also, a 7A-series amplifier plug-in can be installed in one of the horizontal compartments for X-Y operation.

Special purpose plug-ins may have specific restrictions regarding the plug-in compartments in which they can be installed. This information will be given in the instruction manuals for these plug-ins. Refer to the Tektronix Products catalog for additional information on plug-in unit selection.

CONTROLS AND CONNECTORS

External

The major controls and connectors for operation of the 7313/R7313 are located on the front panel of the instrument and several auxiliary functions are provided on the rear panel. Fig. 1-2 provides a brief description of the front-panel controls and connectors and Fig. 1-3 provides a brief description of the rear-panel controls and connectors. More detailed information is given in the 7313/R7313 Operators manual.

Internal

Several switch functions are located on circuit boards within the instrument. A brief description of each internal switch is given in the following discussion.

Remote Erase Selector. Internal multi-pin connector (located on Storage Switch circuit board) to determine whether the external signal, applied to the REMOTE ERASE IN connector, erases the upper storage screen, lower storage screen, or both storage screens. See Fig. 1-4 for further information.

Calibrator Selector. Internal multi-pin connector (located on the Calibrator circuit board) to determine whether the CALIBRATOR output is a one-kilohertz square-wave signal or a dc voltage level. See Fig. 1-4 for further information.

Readout Mode Switch. Two-position switch (located on the Readout circuit board) to determine whether the readout display is present independent of a sweep (free runs) or is triggered at the end of each sweep. See Fig. 1-4 for further information.

Voltage Selector. Multi-pin connector selects Low, Medium, or High voltage regulating range. The multi-pin connector can be exchanged to select 110-volt or 220-volt nominal line voltage source. See Fig. 1-1 and Preliminary Operation, in this section, for further information.

http://manoman.sqhill.com

1362-2

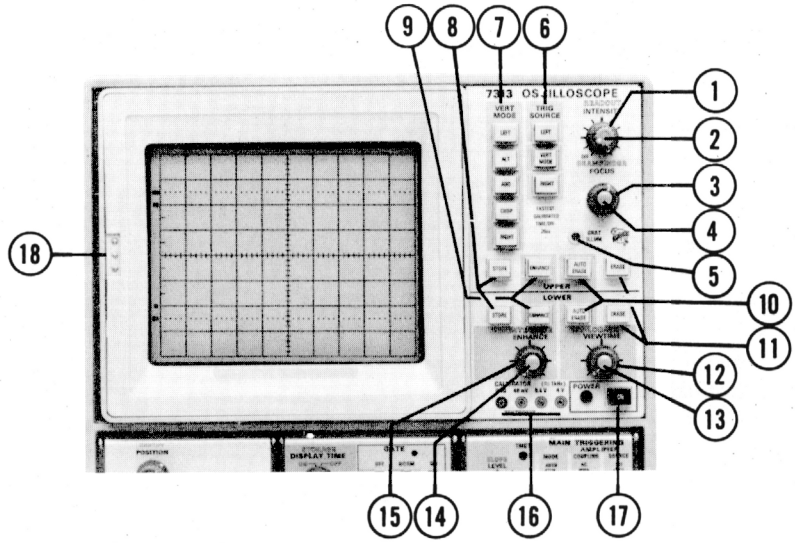

(1) INTENSITY. Varies brightness of crt display.

(2) READOUT. Varies brightness of readout portion of crt display.

(3) FOCUS. Provides optimum display definition.

(4) BEAMFINDER. Returns crt display by compressing vertical and horizontal deflection within graticule area.

(5) GRAT ILLUM. Varies graticule illumination.

(6) TRIG SOURCE. Selects source of trigger signal for time-base unit.

(7) VERT MODE. Selects vertical plug-in compartment that provides vertical deflection signal.

(8) STORE (UPPER and LOWER). Selects storage operation.

(9) ENHANCE (UPPER and LOWER). Increases writing rate for storage of single sweep displays.

(10) AUTO ERASE (UPPER and LOWER). Stores the crt display at the end of each sweep and inhibits further sweeps for a time selected by the VIEW TIME control.

(11) ERASE (UPPER and LOWER). Manually erases stored display.

(12) VIEW TIME. Determines variable viewing interval of stored display.

(13) LOCATE. Pushbutton switch unblanks the crt to provide an indication of the sweep starting point.

(14) INTEGRATE. Permits storage of very fast repetitive signals.

(15) ENHANCE Level (Level not labeled). Provides a selectable increase in writing speed for single sweep displays.

(16) CALIBRATOR. Pin jacks provide 4 V, 0.4 V, and 40 mV outputs at a one kilohertz repetition rate. Dc output can be selected by an internal selector.

(17) POWER. POWER switch controls power to the instrument; POWER light indicates that the power switch is on and the instrument is connected to the power source.

(18) Camera Power (not labeled). Provides power output and receives remote single sweep reset for compatible camera systems.

Fig. 1-2. Front-panel controls and connectors.

http://manoman.sqhill.com

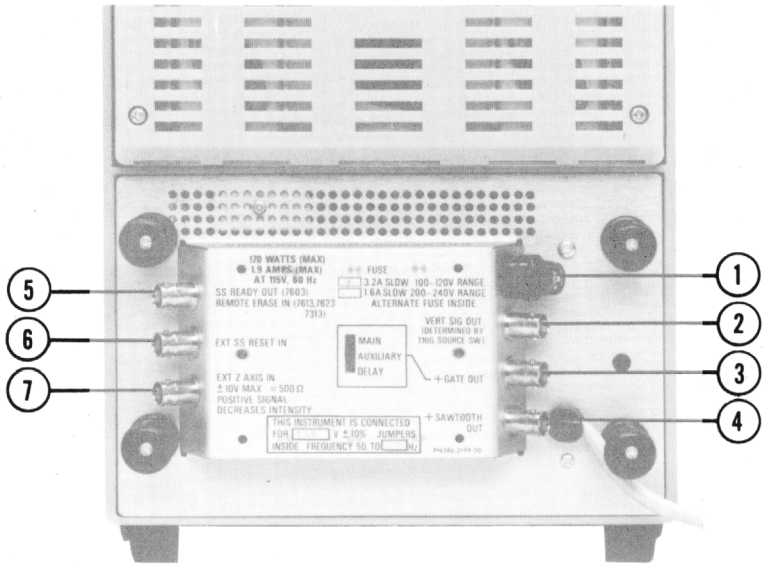

(1) FUSE. Line voltage fuse for instrument.

(2) VERT SIG OUT (Delete with Option 7). Vertical signal selected by TRIG SOURCE and VERT MODE switches (Left, Right, Alt, and Add).

(3) +GATE OUT (Delete with Option 7). Gate signal selected by rear-panel gate selector switch (MAIN, AUXILIARY, and DELAY).

(4) + SAWTOOTH OUT (Delete with Option 7). Positive-going sawtooth signal from time-base unit.

(5) REMOTE ERASE IN (Delete with Option 7). Provides input for an external signal to erase the stored display.

(6) EXT SS RESET IN (Delete with Option 7). Provides input for an external signal to reset the sweep (Time-base unit operating in Single Sweep mode).

(7) EXT Z AXIS IN. Input for intensity modulation of crt display.

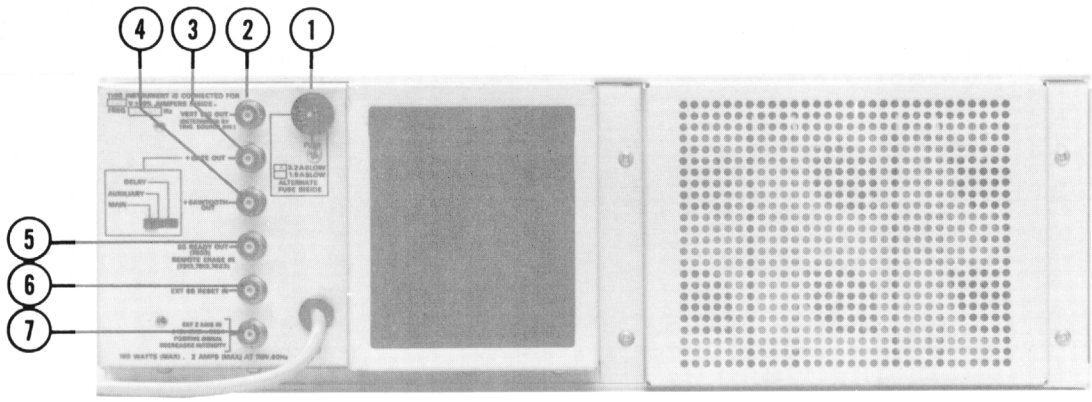

1362-3

Fig. 1-3. Rear-panel controls and connectors.

http://manoman.sqhill.com

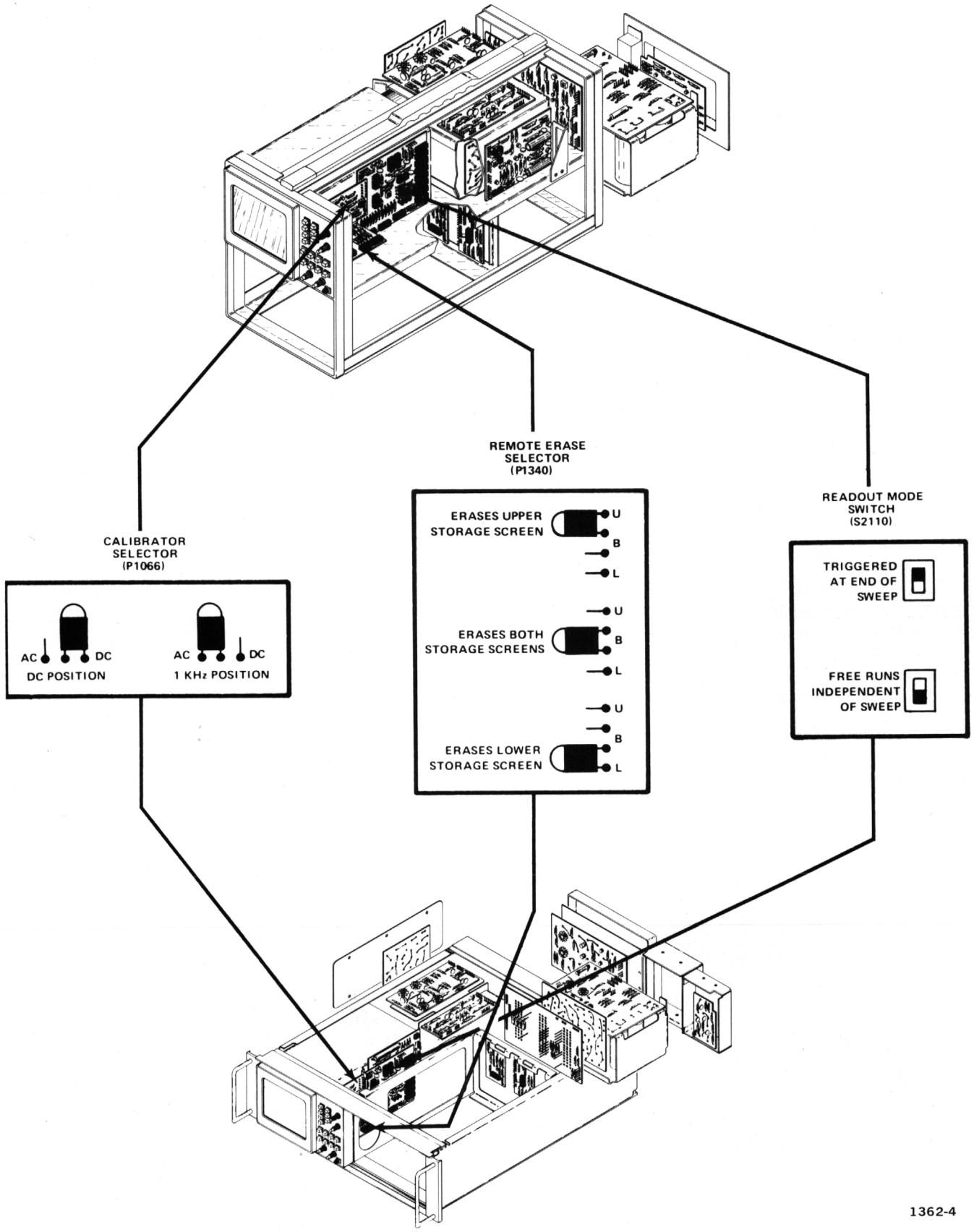

Fig. 1-4. Location and function of internal selectors.

http://manoman.sqhill.com

CIRCUIT DESCRIPTION

This section of the manual describes the circuitry used in the 7313/R7313 Oscilloscope. The description begins with a discussion of the instrument, using the block diagram shown in Fig. 2-1. Next, each circuit is described in detail, using detailed block diagrams, when appropriate, to show the relationship between the stages in each major circuit. Detailed schematics of each circuit are located in the Diagrams section at the back of this manual. Refer to these schematics throughout the following circuit description for specific electrical values and relationships.

BLOCK DIAGRAM DESCRIPTION

The following discussion is provided to aid in understanding the overall concept of the 7313/R7313 before the individual circuits are discussed in detail. A basic block diagram of the 7313/R7313 is shown in Fig. 2-1. Only the basic interconnections between the individual blocks are shown on this diagram. Each number on each block refers to a major circuit within the instrument. The number on each block refers to the complete circuit diagram located at the rear of the manual.

Vertical signals to be displayed on the crt are applied to the Vertical Interface circuit from both vertical plug-in compartments. The Vertical Interface circuit and the VERT MODE switch determine whether the signal from the Left or Right Vertical unit is displayed. The selected vertical signal is then amplified by the Vertical Amplifier circuit to bring it to the level necessary to drive the vertical deflection plates of the crt.

Horizontal signals for display on the crt are connected to the Horizontal Amplifier circuit from the Horizontal plug-in compartment. The Horizontal Amplifier circuit amplifies this signal to provide the horizontal deflection for the crt.

The trigger signals from the vertical plug-in units are connected to the Trigger Selector circuit. This circuit selects the trigger signal that is to be connected to the Horizontal plug-in unit.

The Logic circuit develops control signals for use in other circuits within this instrument and the plug-in units. These output signals automatically determine the correct instrument operation in relation to the plug-in units installed or selected, plug-in unit control settings, and 7313/R7313 control settings.

The Readout System provides an alpha-numeric display for information encoded by the plug-in units. This display is presented on the crt on a time-shared basis with the analog waveform display.

The CRT Circuit produces the voltages and contains the controls necessary for operation of the cathode-ray tube. It also contains the Z-Axis Amplifier which provides the drive signal to control the intensity level of the crt display.

The Storage Circuit provides the voltage level necessary to operate the 7313/R7313 in the storage modes.

The power necessary for the operation of this instrument is produced by the Low-Voltage Power Supply circuit. These voltages are connected to all circuits within the instrument.

The Calibrator circuit produces a square-wave output, with accurate amplitude, which can be used to check the calibration of this instrument and compensation of probes.

The Output Signals circuits process signals from the plug-in units to the VERT SIG OUT, + SAWTOOTH OUT, and + GATE OUT connectors on the rear panel of the 7313/R7313.

LOGIC FUNDAMENTALS

Digital logic techniques are used to perform many functions within this instrument. The function and operation of the logic circuits are described using logic symbology and terminology. This portion of the manual is provided to aid in the understanding of these symbols and logic concepts, not a comprehensive discussion of the subject. For further information on binary number systems and the associated Boolean Algebra concepts, the derivation of logic functions, a more detailed analysis of digital logic, etc., refer to the following textbooks:

Robert C. Baron and Albert T. Piccirilli, "Digital Logic and Computer Operation", McGraw-Hill, New York, 1967.

Thomas C. Bartee, "Digital Computer Fundamentals", McGraw-Hill, New York, 1966.

http://manoman.sqhill.com

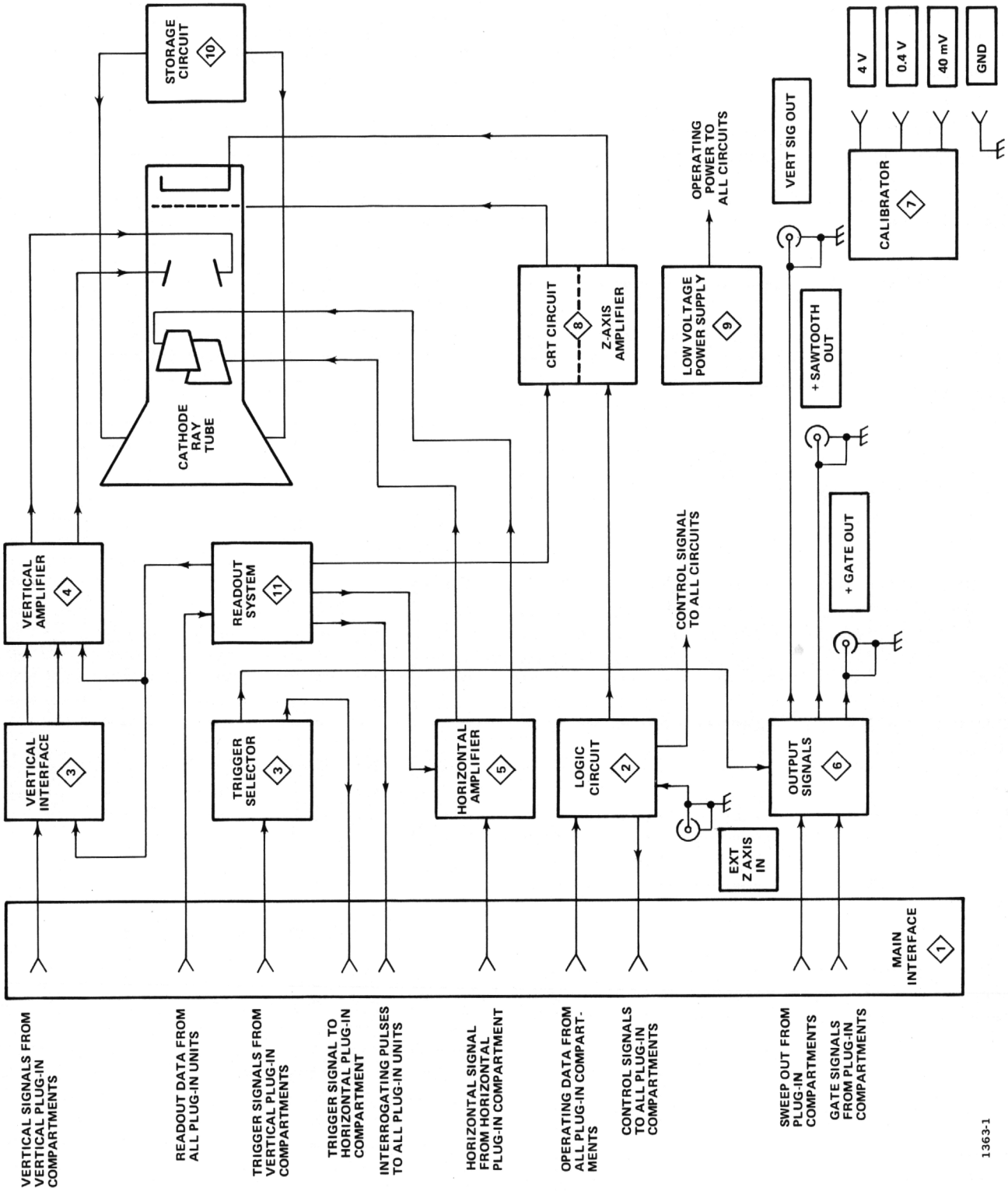

Fig. 2-1. Basic block diagram of 7313/R7313 Oscilloscope.

http://manoman.sqhill.com

Yaohan Chu, "Digital Computer Design Fundamentals", McGraw-Hill, New York, 1962.

Joseph Millman and Herbert Taub, "Pulse, Digital, and Switching Waveforms", McGraw-Hill, New York, Chapters 9-11, 1965.

Symbols

The operation of circuits in this instrument which use digital techniques is described using the graphic symbols set forth in military standard MIL-STD-806B. Table 2-1 provides a basic logic reference for the logic devices used within this instrument. Any deviations from the standard symbology, or devices not defined by the standard are described in the circuit description for the applicable device.

NOTE

Logic symbols used on the diagrams depict the logic function as used in this instrument and may differ from the manufacturer's data.

Logic Polarity

All logic functions are described using the positive logic convention. Positive logic is a system of notation where the more positive of two levels (HI) is called the true or 1-state; the more negative level (LO) is called the false or 0-state. The HI-LO method of notation is used in this logic description. The specific voltages that constitute a HI or LO state vary between individual devices. Wherever possible, the input and output lines are named to indicate the function that they perform when at the HI (true) state.

Input/Output Tables

Input/output (truth) tables are used in conjunction with the logic diagrams to show the input combinations important to a particular function, along with the resultant output conditions. This table may be given either for an individual device or for a complete logic stage. For examples of input/output tables for individual devices, see Table 2-1.

Non-Digital Devices

Not all of the integrated circuit devices in this instrument are digitial logic devices. The function of non-digital devices is described individually, using operating waveforms or other techniques to illustrate their function.

TABLE 2-1

Basic Logic Reference

Device	Symbol	Description	Input/Output Table
AND gate	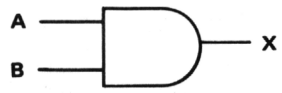	A device with two or more inputs and one output. The output of the AND gate is HI if and only if all of the inputs are at the HI state.	Input / Output A B X LO LO LO LO HI LO HI LO LO HI HI HI
NAND gate	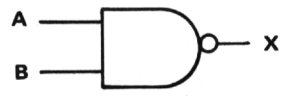	A device with two or more inputs and one output. The output of the NAND gate is LO if and only if all of the inputs are at the HI state.	Input / Output A B X LO LO HI LO HI HI HI LO HI HI HI LO
OR gate	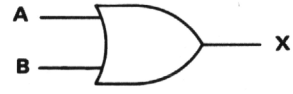	A device with two or more inputs and one output. The output of the OR gate is HI if one or more of the inputs are at the HI state.	Input / Output A B X LO LO LO LO HI HI HI LO HI HI HI HI

http://manoman.sqhill.com

TABLE 2-1 (cont)

Device	Symbol	Description	Input/Output Table
NOR gate	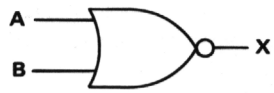	A device with two or more inputs and one output. The output of the NOR gate is LO if one or more of the inputs are at the HI state.	Input / Output A B X LO LO HI LO HI LO HI LO LO HI HI LO
Inverter	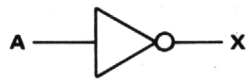	A device with one input and one output. The output state is always opposite to the input state.	Input / Output A X LO HI HI LO
LO-state indicator	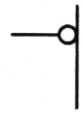	A small circle at the input or output of a symbol indicates that the LO state is the significant state. Absence of the circle indicates that the HI state is the significant state. Two examples follow:	Input / Output A B X LO LO LO LO HI HI HI LO LO HI HI LO
	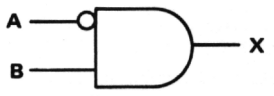	AND gate with LO-state indicator at the A input. The output of this gate is HI if and only if the A input is LO and the B input is HI.	
	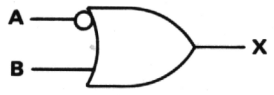	OR gate with LO-state indicator at the A input: The output of this gate is HI if either the A input is LO or the B input is HI.	Input / Output A B X LO LO HI LO HI HI HI LO LO HI HI HI
Edge symbol	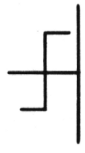 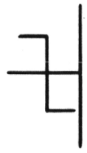	Normally superimposed on an input line to a logic symbol. Indicates that this input (usually the trigger input of a flip-flop) responds to the indicated transition of the applied signal.	

http://manoman.sqhill.com

TABLE 2-1 (cont)

Device	Symbol	Description	Input/Output Table
Triggered (toggle) Flip-Flop	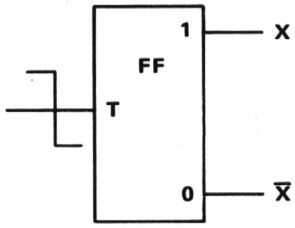	A bistable device with one input and two outputs (either or both outputs may be used). When triggered, the outputs change from one stable state to the other stable state with each trigger. The outputs are complementary (i.e., when one output is HI the other is LO). The edge symbol on the trigger (T) input may be of either polarity depending on the device.	Input / Output Condition before trigger pulse: X, $\overline{X}$ — Condition after trigger pulse: X, $\overline{X}$ LO, HI — HI, LO HI, LO — LO, HI
Set-Clear (J-K) Flip-Flop	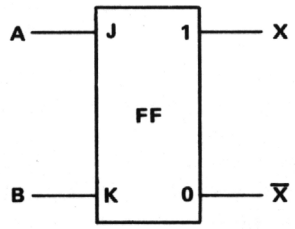	A bistable device with two inputs and two outputs (either or both outputs may be used). The outputs change state in response to the states at the inputs. The outputs are complementary (i.e., when one output is HI the other is LO).	Input / Output A, B — X, $\overline{X}$ LO, LO — No change LO, HI — LO, HI HI, LO — HI, LO HI, HI — Changes state
D (data) Type Flip-Flop	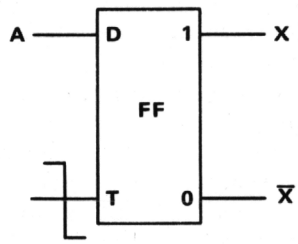	A bistable device with two inputs and two outputs (either or both outputs may be used). When triggered the state of the "1" output changes to the state at the data (D) input prior to the trigger. The outputs are complementary (i.e., when one output is HI the other is LO). The edge symbol on the trigger (T) input may be of either polarity, depending on the device.	Input / Output A — X, $\overline{X}$ LO — LO, HI HI — HI, LO **Output conditions shown after trigger pulse**
Triggered Set-Clear (J-K) Flip-Flop	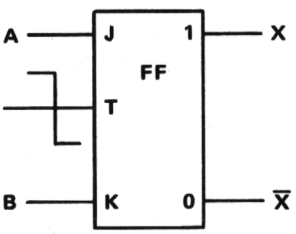	A bistable device with three or more inputs and two outputs (either or both outputs may be used). When triggered, the outputs change state in response to the states at the inputs prior to the trigger. The outputs are complementary (i.e., when one output is HI the other is LO). The edge symbol on the trigger (T) input may be of either polarity depending on the device.	Input / Output A, B — X, $\overline{X}$ LO, LO — No change LO, HI — LO, HI HI, LO — HI, LO HI, HI — Changes state **Output conditions shown after trigger pulse**

http://manoman.sqhill.com

TABLE 2-1 (cont)

Device	Symbol	Description	Input/Output Table
Flip-Flop with Direct Inputs (may be applied to all triggered flip-flops)	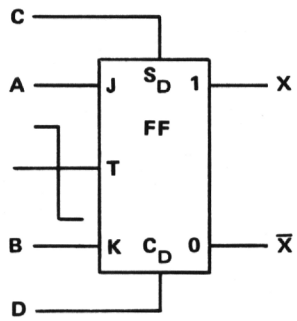	For devices with direct-set (S_D) or direct-clear (C_D) inputs, the indicated state at either of these inputs over-rides all other inputs (including trigger) to set the outputs to the states shown in the input/output table.	Input / Output A B C D X $\overline{X}$ 1 1 LO LO No change[1] Φ Φ LO HI LO HI Φ Φ HI LO HI LO Φ Φ HI HI Undefined Φ = Has no effect in this case [1]Output state determined by conditions at triggered inputs

CIRCUIT OPERATION

This section provides a detailed description of the electrical operation and relationship of the circuits in the 7313/R7313. The theory of operation for circuits unique to this instrument is described in detail in this discussion. Circuits commonly used in the electronics industry are not described in detail. If more information is desired on these commonly used circuits refer to the following textbooks.

Phillip Cutler, "Semiconductor Circuit Analysis", McGraw-Hill, New York, 1964.

Jacob Millman and Herbert Taub, "Pulse Digital and Switching Waveforms", McGraw-Hill, New York, 1965.

Albert Paul Malvino, "Transistor Circuit Approximations", McGraw-Hill, New York, 1973.

The following circuit analysis is written around the detailed block diagrams which are given for each major circuit. These detailed block diagrams give the names of the individual stages within major circuits and show how they are connected together to form the major circuit. The block diagrams also show the inputs and outputs for each circuit and the relationship of the front-panel controls to the individual stages. The circuit diagrams from which the detailed block diagrams are derived are shown in the Diagrams section at the rear of the service manual.

MAIN INTERFACE ①

The Main Interface circuit block includes circuitry for plug-in interface and interconnections between the plug-in compartments, circuit boards, etc., of this instrument. The schematic for the Main Interface is shown on diagram 1 at the rear of this manual.

LOGIC ②

The Logic circuit develops control signals for use in other circuits within this instrument. These output signals automatically determine the correct instrument operation in relation to the plug-in units installed or selected, plug-in unit control settings, and 7313/R7313 control settings. Figure 2-2 shows a detailed block diagram of the Logic circuit and the schematic is shown on diagram 2 at the rear of the manual.

The Logic circuit block diagram shows the source of the input control signals, the output signals produced by this stage, and the basic interconnections between blocks. Details of the interrelation between stages in this circuit are given in the circuit description that follows. The circuit description for the Logic circuit is written with the approach that each of the integrated circuits and its associated discrete components composes an individual stage as shown by the block diagram (see Fig. 2-2). The operation of each of these stages is discussed, relating the input signals or levels to the output, with consideration given to the various modes of operation that may affect the stage.

Z-Axis Logic

The Z-Axis Logic stage produces an output current which sets the intensity of the display on the crt. The level of this output current is determined by the setting of the front-panel INTENSITY control, an external signal from the rear-panel EXT Z-AXIS input connector, or Auxiliary Z-Axis signals from the plug-in units. The Vertical Chopped Blanking from U55 is applied to this stage to blank the crt display during vertical trace switching. The Intensity Limit input from the Horizontal plug-in compartment provides protection for the crt phosphor at slow sweep rates.

http://manoman.sqhill.com

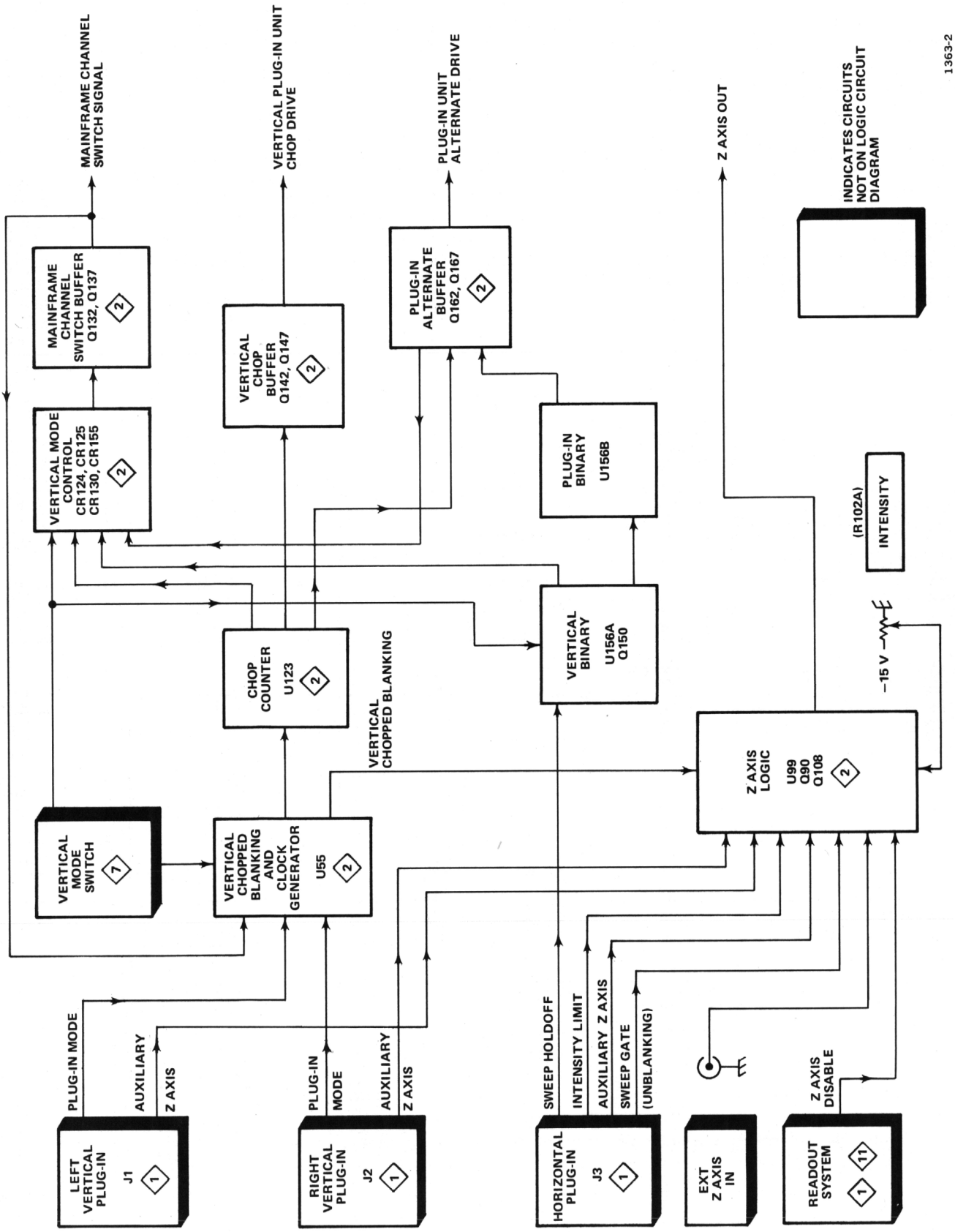

Fig. 2-2. Logic circuit detailed block diagram.

http://manoman.sqhill.com

The Z-Axis Logic stage consists of transistor Q108, dual transistor Q90, and five-transistor array U99. A simplified schematic of the Z-Axis Logic stage is shown in Fig. 2-3. Only the components essential to the operation of this stage are shown in this simplified schematic.

Transistor U99D provides current I_t, which is the maximum possible output current of the Z-Axis Logic. The value of I_t is determined by the current I_1 and resistors R110, R112. Transistor U99E provides compensation for the base-emitter drop of U99D. The current I_1 is determined by resistors R109, R62, R63, R76, R77 and also by the logic levels of the Vertical Chopped Blanking input and the Intensity Limit input.

The Vertical Chopped Blanking and Intensity Limit input levels are quiescently HI. During Vertical Chopped Blanking the input level goes LO and current I_1 is reduced, which causes I_t to drop and blank the crt during vertical trace switching.

The Intensity Limit function limits the output current of this stage to protect the crt phosphor whenever the time-base unit is set to a slow sweep rate. For conditions that do not require limiting, this input level is HI; when the time-base unit is set to a sweep rate that requires intensity limiting, the Intensity Limit input goes to ground in the plug-in unit. This reduces the level of I_1 and therefore reduces I_t and the intensity of the display. At the same

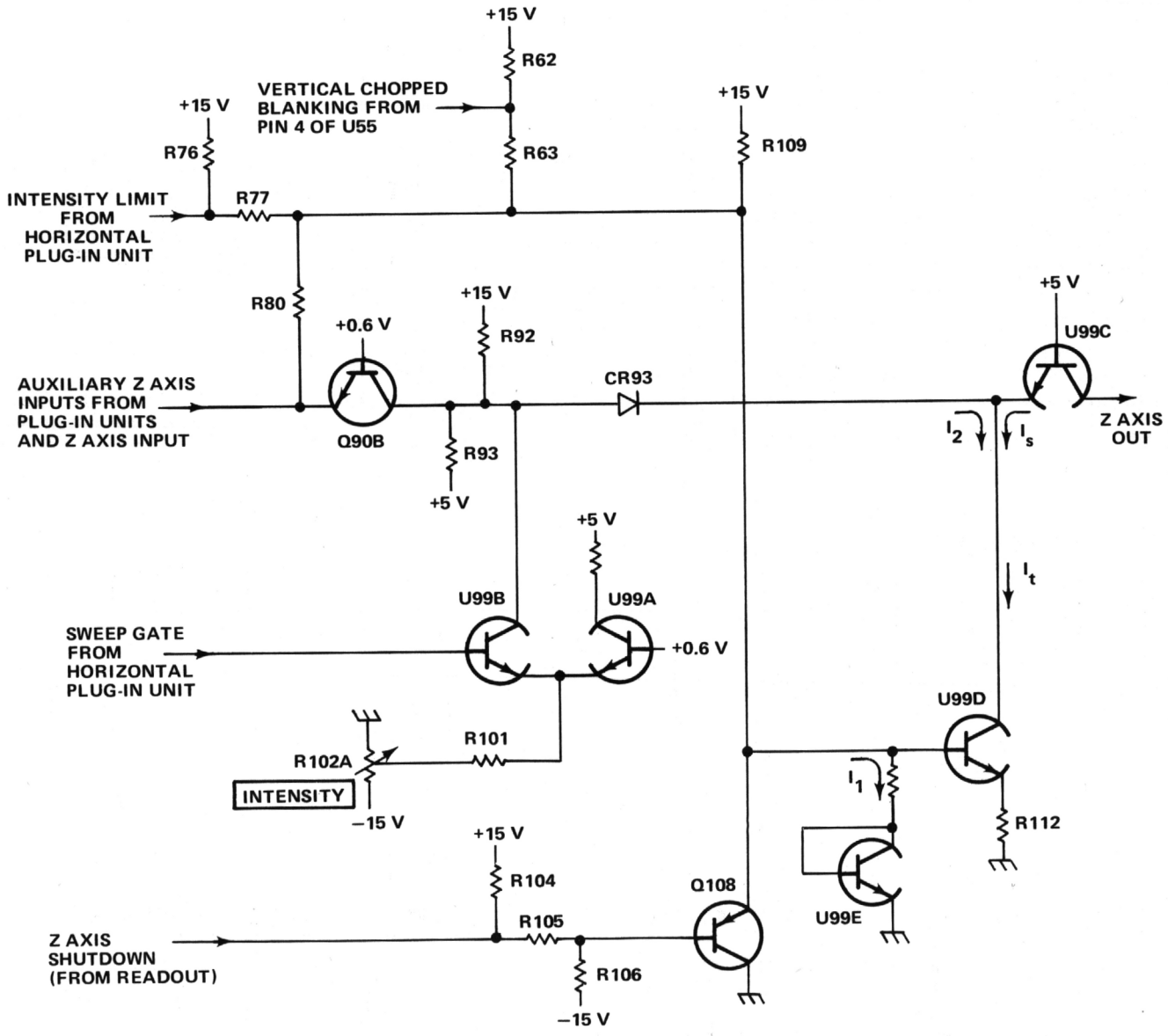

Fig. 2-3. Simplified schematic of Z-Axis Logic stage.

http://manoman.sqhill.com

time, the ground level from the Intensity Limit input is connected to the emitter of Q90B through R80. This connection limits the level to which the intensity can be increased at slow sweep rates.

The collector of U99D is made up of two currents, I_s and I_2 (see Fig. 2-3). Under quiescent conditions (no trace, crt blanked) the level of I_2 is determined by divider R92 and R93. When the Sweep Gate level is LO (no sweep in process), I_2 is at its maximum level so that I_s is minimum to provide minimum intensity of the display (I_s + I_2 are always equal to I_t). During sweep time, the Sweep Gate level at the base of U99A goes HI. Now, the current through U99A, as established by INTENSITY control R102A, determines the output current. As the INTENSITY control is turned towards maximum, the level of I_2 decreases. This allows I_s to increase to produce a brighter display. The Auxiliary Z-Axis inputs from the plug-in compartments and the intensity modulating signal from the EXT Z-AXIS input connector are connected to the emitter of Q90B. These signals modulate the level of I_2 to modulate the intensity of the display.

When readout information is to be displayed on the crt, the Z-Axis Shutdown is LO. This forward biases and saturates Q108, shunting I_1 through Q108 to ground. This reduces the output current to zero during the readout time.

Clock Generator

One half of integrated circuit U55, along with the external components shown in Fig. 2-4A, make up the Clock Generator stage. R1, Q1, Q2, and Q3 represent an equivalent circuit contained within U55. This circuit, along with discrete components C59, R56, R57, and R59, forms a two-megahertz, free-running oscillator to provide a timing signal (clock) for mainframe vertical chopping and plug-in chopping.

The stage operates as follows: Assume that Q2 is conducting and Q1 is off. The collector current of Q2 produces a voltage drop across R1 which holds Q1 off. This negative level at the collector of Q2 is also connected to pin 14 through Q3 (see waveforms in Fig. 2-4B at time T_0). Since there is no current through Q1, C59 begins to charge towards −15 volts through R56-R57. The emitter of Q1 goes negative as C59 charges, until it reaches a level about 0.6 volt more negative than the level at its base. Then, Q1 is forward biased and its emitter rapidly rises positive. Since C59 cannot change its charge instantaneously, the sudden change in voltage at the emitter of Q1 pulls the emitter of Q2 positive also, to reverse bias it. With Q2 reverse biased, its collector rises positive to produce a positive output level at pin 14 (see time T_1 on Fig. 2-4B).

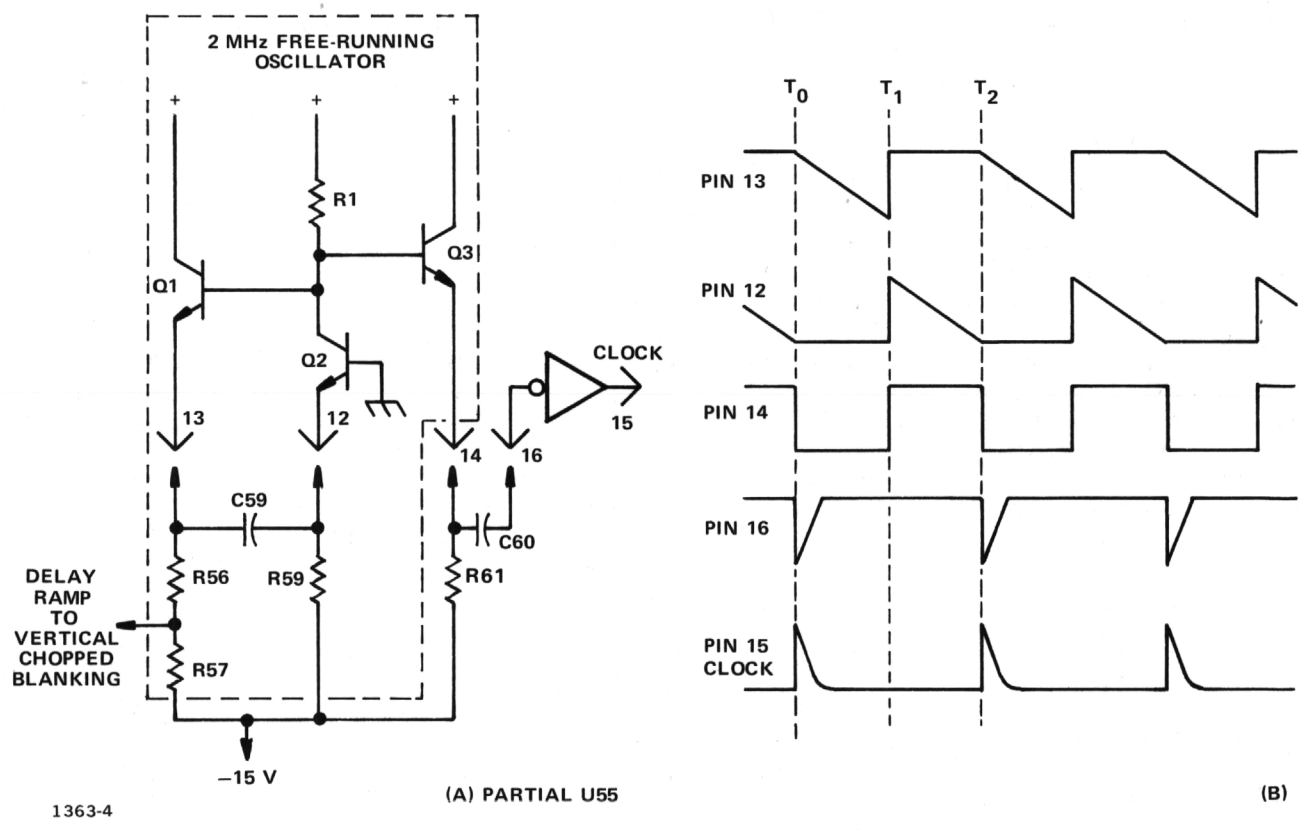

Fig. 2-4. (A) Diagram of Clock Generator stage. (B) Idealized waveforms from Clock Generator stage.

http://manoman.sqhill.com

Now, conditions are reversed. Since Q2 is reverse biased, there is no current through it. Therefore, C59 can begin to discharge through R59. The emitter level of Q2 follows the discharge of C59 until it reaches a level about 0.6 volt more negative than its base. Then, Q2 is forward biased and its collector drops negative to reverse bias Q1. The level at pin 14 drops negative also, to complete the cycle. Once again, C59 begins to charge through R56-R57 to start the second cycle.

Two outputs are provided from this oscillator. The Delay Ramp signal from the junction of R56-R57 is connected to the Vertical Chopped Blanking stage. This signal has the same waveshape as shown by the waveform at pin 13, with its slope determined by the divider ratio between R56-R57. A square-wave output is provided at pin 14. The frequency of this square wave is determined by the RC product of C59 and R1. The duty cycle is determined by the ratio of R56-R57 to R59.

The square wave at pin 14 is connected to pin 16 through C60. C60, along with the internal resistance of U55, differentiates the square wave at pin 14 to produce a negative-going pulse coincident with the falling edge of the square wave (positive-going pulse coincident with rising edge has no effect on circuit operation). This negative-going pulse is connected to pin 15 through an inverter-shaper, which is also part of U55. The output at pin 15 is a positive-going clock pulse with a repetition rate of about two megahertz.

Vertical Chopped Blanking

The Vertical Chopped Blanking stage is made up of the remaining half of integrated circuit U55. This stage determines if Vertical Chopped Blanking pulses are required, based upon the operating mode of the vertical system and the plug-in units (dual-trace units only). Vertical Chopped Blanking pulses are produced if: (1) VERT MODE switch is set to CHOP, (2) dual-trace vertical unit is operating in the chopped mode and that unit is being displayed, (3) dual-trace vertical unit is operating in the chopped mode with the VERT MODE switch set to ADD. The repetition rate of the negative-going Vertical Chopped Blanking pulse output at pin 4 is always two megahertz as determined by the Clock Generator stage.

The Delay Ramp signal from the Clock Generator stage determines the repetition rate and pulse width of the Vertical Chopped Blanking pulses. The Delay Ramp applied to pin 10 starts to go negative from a level of about 1.1 volts coincident with the leading edge of the clock pulse (see waveforms in Fig. 2-5). This results in a HI quiescent condition for the Vertical Chopped Blanking pulse. The slope of the negative-going Delay Ramp (at pin 10 of U55) is determined by the Clock Generator stage. As it reaches a level slightly negative from ground, the Vertical Chopped Blanking pulse output level changes to the LO state. This signal remains LO until the Delay Ramp goes HI again. Notice the delay between the leading edge of the clock pulse generated by U55 and the leading edge of the Vertical Chopped Blanking pulses (see Fig. 2-5). The amount of delay between the leading edges of these pulses is determined by the slope of the Delay Ramp applied to pin 10. This delay is necessary due to the delay line in the vertical deflection system. Otherwise, the trace blanking resulting from the Vertical Chopped Blanking pulse would not coincide with the switching between the displayed traces. The duty cycle of the square wave produced in the Clock Generator stage determines the pulse width of the Vertical Chopped Blanking pulses (see Clock Generator discussion for more information).

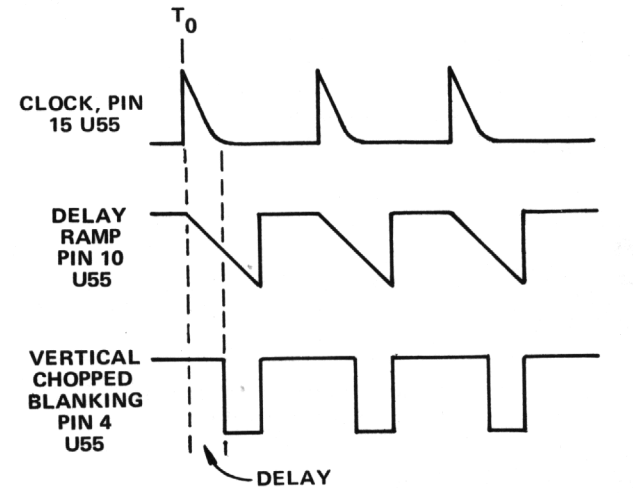

Fig. 2-5. Idealized waveform for Vertical Chopped Blanking stage.

Whenever this instrument is turned on, Vertical Chopped Blanking pulses are being produced at a two-megahertz rate. However, these pulses are available as an output at pin 4 only when the remaining inputs to U55 are at the correct levels. The following discussions give the operating conditions which produce Vertical Chopped Blanking pulses to blank the crt during vertical trace switching. Figure 2-6A identifies the functions of the pins of U55.

Chop Vertical Mode. When the VERT MODE switch is set to CHOP, Vertical Chopped Blanking pulses are available at pin 4 at all times. The input conditions necessary are:

Pin 3 HI—VERT MODE switch set to CHOP.

Pin 7 LO—VERT MODE switch set to any position except ADD.

http://manoman.sghill.com

Pin 10 LO—Delay Ramp more negative than about 0 volts.

Left Vertical Unit Set for Chopped Operation. If the Left Vertical unit is set for chopped operation, the setting of the VERT MODE switch determines whether the Vertical Chopped Blanking pulses are available. If the VERT MODE switch is set to the CHOP position, conditions are as previously described. Operation in the ADD position of the VERT MODE switch is given later. For the LEFT position of the VERT MODE switch, or when the Left Vertical unit is to be displayed in the ALT mode, Vertical Chopped Blanking pulses are available at pin 4 at all times (two-megahertz rate). The input conditions are:

Pin 3 LO—VERT MODE switch set to any position except CHOP.

Pin 5 LO—Left Vertical unit set to chopped mode.

Pin 6 LO—Left Vertical unit to be displayed (Mainframe Channel Switch Signal LO).

Pin 7 LO—VERT MODE switch set to any position except ADD.

Pin 10 LO—Delay Ramp more negative than about 0 volts.

Notice that the Mainframe Channel Switch Signal at pin 6 must be LO for output pulses to be present at pin 4. This means that when the VERT MODE switch is set to ALT, Vertical Chopped Blanking pulses are produced only during the time that the Left Vertical unit is to be displayed (unless Right Vertical unit is also set for chopped operation).

Right Vertical Unit Set for Chopped Operation. If the Right Vertical unit is set for the chopped mode, operation is the same as described previously for the Left Vertical unit except that Vertical Chopped Blanking pulses are produced when the VERT MODE switch is set to RIGHT or when the Vertical Mode Command is HI in the ALT mode. The input conditions are:

Pin 3 LO—VERT MODE switch set to any position except CHOP.

Pin 6 HI—Right Vertical unit to be displayed (Mainframe Channel Switch Signal HI).

Pin 7 LO—VERT MODE switch set to any position except ADD.

pin 8 LO—Right Vertical unit set to chopped mode.

Pin 10 LO—Delay Ramp more negative than about 0 volts.

Add Vertical Mode. When the VERT MODE switch is in the ADD position and either or both of the vertical units are operating in the chopped mode, Vertical Chopped Blanking pulses must be available to block out the transition between traces of the vertical units. The input conditions are:

Pin 3 LO—VERT MODE switch set to any position except CHOP.

Pin 5 LO—Left Vertical unit set to chopped mode (can be HI if pin 8 is LO).

Pin 7 HI—VERT MODE switch set to ADD.

Pin 8 LO—Right Vertical unit set to chopped mode (can be HI if pin 5 is LO).

Pin 10 LO—Delay Ramp more negative than about 0 volts.

Figure 2-6A shows a logic diagram of the Vertical Chopped Blanking stage. Notice the comparator block on this diagram (one input connected to pin 10). The output of this comparator is determined by the relationship between the levels at its inputs. If pin 10 is more positive (HI) than the grounded input, the output is HI also; if it is more negative (LO), the output is LO. An input/output table for this stage is given in Fig. 2-6B.

Chop Counter

The Chop Counter stage produces the Mainframe Chop signal and the Plug-In Chop Drive. The clock pulse produced by the Clock Generator stage provides the timing signal for this stage. A logic diagram of the Chop Counter, identifying the inputs and outputs is shown in Fig. 2-7.

The Chop Counter stage consists of integrated circuit U123, a dual D-type flip-flop with direct-set, direct-clear inputs (see Table 2-1 for operation of D-type flip-flop). In this circuit configuration, the D-type flip-flop operates in the triggered mode. The two-megahertz clock pulses from the Clock Generator stage are connected to the trigger (T) input of U123B. Under this condition, U123B changes output states with each positive-going clock pulse, and the signal at its "1" output is a square wave that switches between the HI and LO levels at a one-megahertz rate. This signal is connected to the Vertical Mode Control stage to provide the Mainframe Channel Switch Signal. The signal is also connected to the trigger input of U123A. U123A also changes output states with each positive-going pulse at its trigger input to produce a 500-kilohertz square wave at its "1" output. The output from U123A provides the Plug-In Chop Drive to the Plug-In Chop Buffer stage (Q142, Q147). Idealized waveforms showing the timing relationship between the input and output signals for this stage are shown in Fig. 2-8.

http://manoman.sqhill.com

(A)

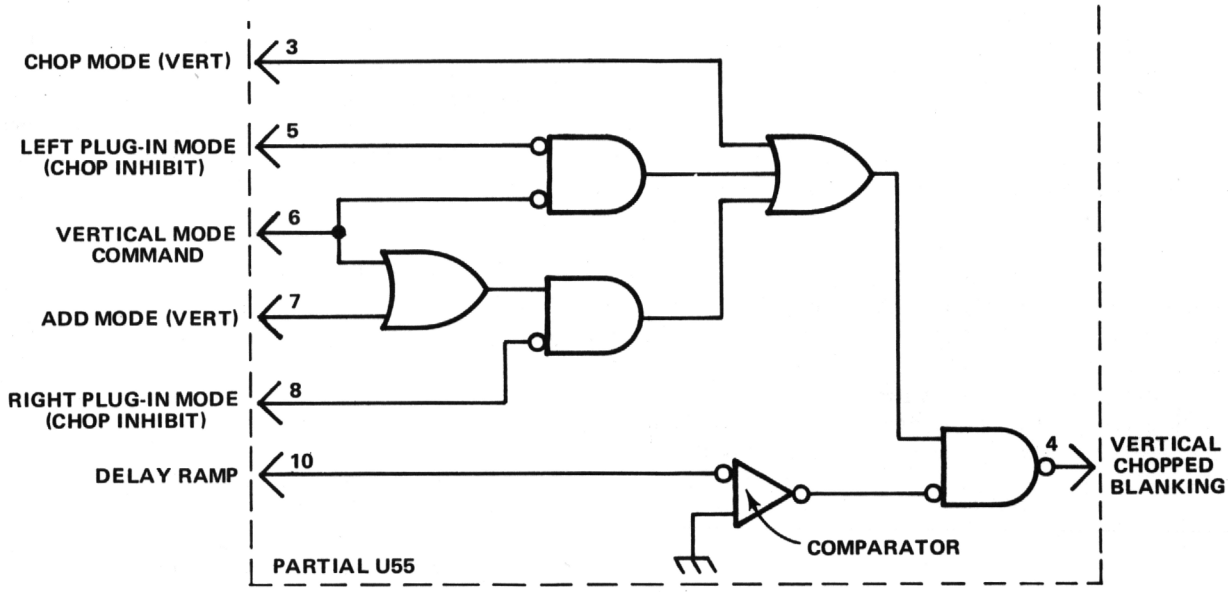

(B)

INPUT						OUTPUT	
CHOP MODE (VERT) 3	LEFT PLUG-IN MODE (CHOP INHIBIT) 5	MAINFRAME CHANNEL SWITCH SIGNAL 6	ADD MODE (VERTICAL) 7	RIGHT PLUG-IN MODE (CHOP INHIBIT) 8	DELAY RAMP 10[1]	VERTICAL CHOPPED BLANKING 4[2]	CONDITIONS
HI	Φ	Φ	LO	Φ	LO	LO	CHOP MODE (VERTICAL)
LO	LO	LO	LO	Φ	LO	LO	LEFT PLUG-IN CHOPPED
LO	Φ	HI	LO	LO	LO	LO	RIGHT PLUG-IN CHOPPED
LO	LO[3]	Φ	HI	LO[3]	LO	LO	ADD MODE, LEFT OR RIGHT PLUG-IN CHOPPED
ALL OTHER COMBINATIONS						HI	NO VERTICAL CHOPPED BLANKING PULSES AT OUTPUT

Φ = HAS NO EFFECT IN THIS CASE.

[1] RAMP SIGNAL; CONSIDERED LO WHEN MORE NEGATIVE THAN ABOUT ZERO VOLTS.

[2] NEGATIVE-GOING PULSE AT TWO MEGAHERTZ RATE.

[3] PIN 5 CAN BE HI AND NOT AFFECT OPERATION IF PIN 8 IS LO, AND VICE VERSA.

1363-6

Fig. 2-6. (A) Logic diagram for Vertical Chopped Blanking stage. (B) Table of input/output combinations for Vertical Blanking stage.

Vertical Mode Control

The Vertical Mode Control stage consists of discrete components CR124-CR125, CR126, CR130-CR155, and buffer amplifier Q132-Q137. These components develop the Mainframe Channel Switch Signal, which is connected to the Main Interface circuits (vertical plug-in compartments and trigger selection circuitry) and the Vertical Interface circuit to indicate which vertical unit is to be displayed. When this output level is HI, the Right Vertical unit is displayed and when it is LO, the Left Vertical unit is displayed.

A logic diagram of the Vertical Mode Control stage is shown in Fig. 2-9. The discrete components that make up each logic function are identified. The gate connected to the input of the Vertical Mode Buffer Amplifier is a phantom-OR gate. A phantom-OR gate performs the OR logic function merely by interconnection of the three inputs.

The VERT MODE switch, located on diagram 7, provides control levels for this stage. This switch provides a HI level on only one of four output lines to indicate the

http://manoman.sqhill.com

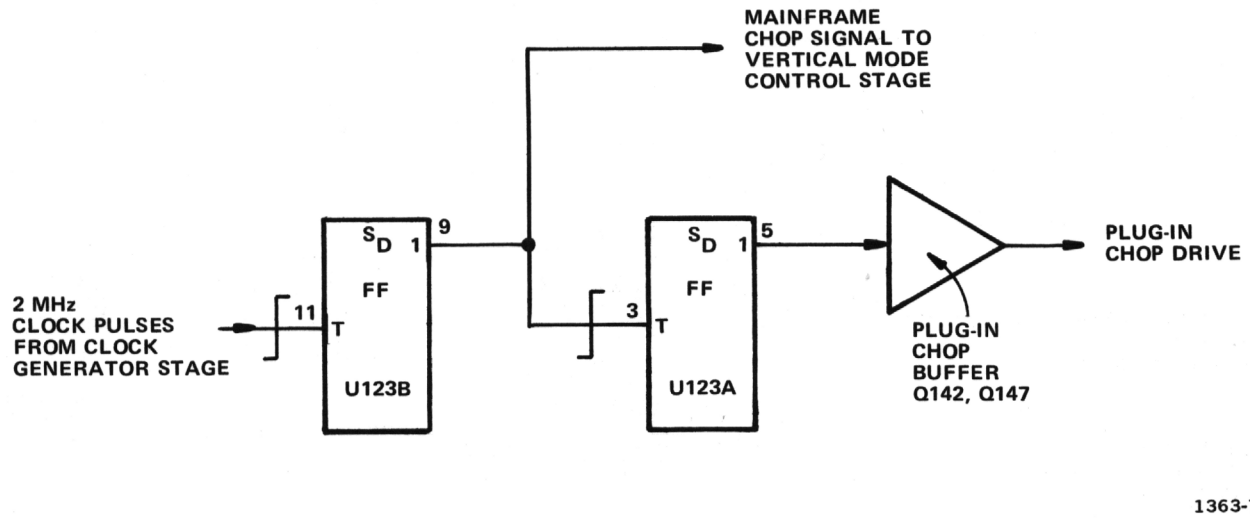

Fig. 2-7. Detailed logic diagram of Chop Counter stage.

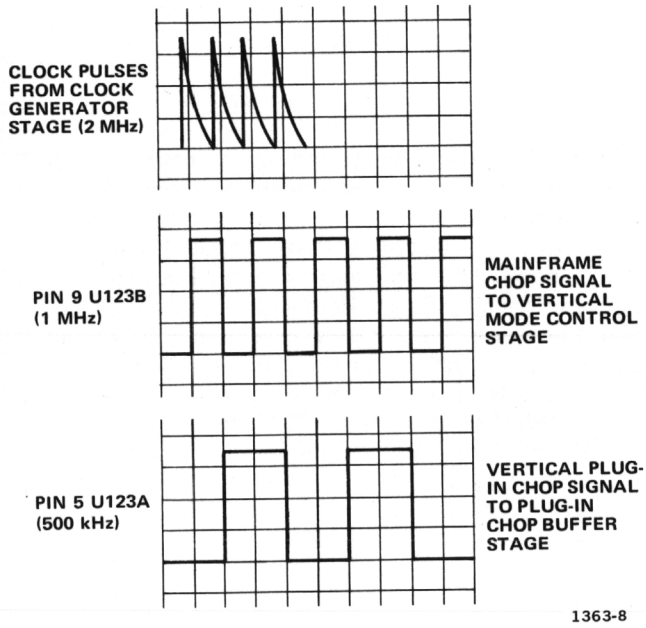

Fig. 2-8. Idealized input and output waveforms for Chop Counter stage.

selected vertical mode; the remaining lines are LO. The fifth mode (LEFT) is indicated when all four output lines are LO. Operation of the Vertical Mode Control in all positions of the VERT MODE switch is as follows:

Right. When the VERT MODE switch is set to RIGHT, a HI level is connected to the Buffer Amplifier (Q132, Q137) through R126 and CR126. The LO level at the anodes of diodes CR125 and CR130 holds them reverse biased. The resultant Mainframe Channel Switch Signal from the Vertical Mode Buffer Amplifier is a HI level to indicate that the Right Vertical unit is to be displayed.

Chop. In the CHOP position of the VERT MODE switch, a HI level is applied to the anodes of diodes CR124-CR125 through R125. Both diodes are forward biased so the Vertical Chop signal from pin 9 of U123B can pass to the emitter of Q132. This signal switches between the HI and LO levels at a one-megahertz rate and it produces a corresponding Mainframe Channel Switch Signal output at the emitter of Q137. When this output is HI, the Right Vertical unit is displayed and when it switches to LO, the Left Vertical unit is displayed.

Alt. In the ALT mode, the VERT MODE switch applies a HI level to the anodes of diodes CR130-CR155 through R130. These diodes are forward biased so the Display Right Command from pin 5 of U156A can pass to the emitter of Q132 to determine the Mainframe Channel Switch Signal level. The Display Right Command switches between its HI and LO levels at a rate determined by the Vertical Binary stage.

ADD and LEFT. The control levels in the ADD and LEFT positions of the VERT MODE switch are not connected to this stage. However, since only the line corresponding to the selected vertical mode can be HI, the RIGHT, CHOP, and ALT lines must remain at their LO level when either LEFT or ADD are selected. Therefore, the emitter of Q132 remains LO to produce a control output level. Final control of LEFT or ADD mode is made by the Vertical Interface circuit.

Vertical Binary

The Vertical Binary stage consists of integrated circuit U156A and transistor Q150. U156A is a D-type flip-flop with a direct-clear input (see Table 2-1 for operating details). The connection between the "0" output

http://manoman.sqhill.com

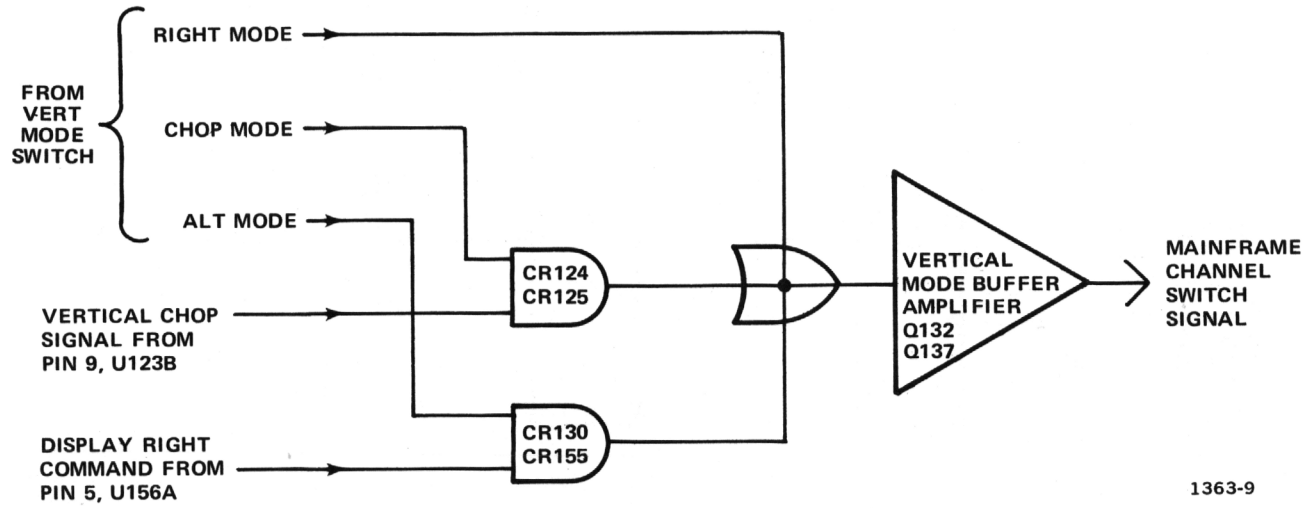

Fig. 2-9. Logic diagram of Vertical Mode Control and Vertical Mode Buffer Amplifier stages.

and the data (D) input enables this flip-flop to operate in the triggered mode. A logic diagram of the Vertical Binary stage is shown in Fig. 2-10.

The Vertical Binary stage operates in one of three conditions, depending on the levels of the applied control signals. These conditions are:

ALT Mode With Sweep.

Input levels:

ALT Command—HI

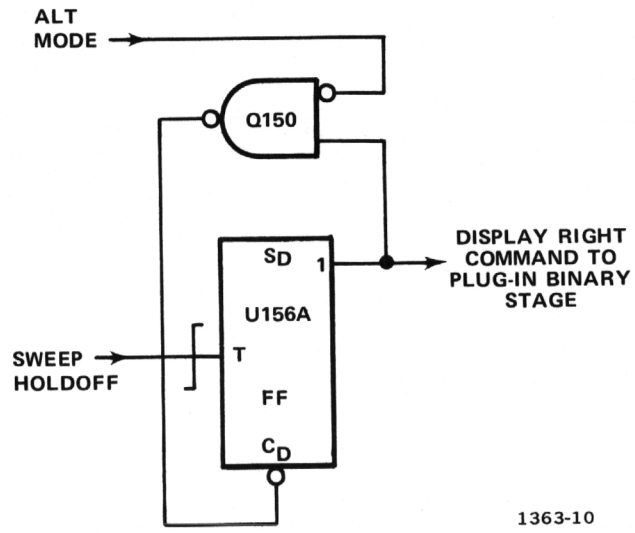

Fig. 2-10. Logic diagram of Vertical Binary stage.

Holdoff—Pulse which switches from LO to HI level at end of each sweep.

In this condition, the HI level at the emitter of Q150 disables it so its collector remains HI. As a result, Q150 has no effect upon operation of the stage and the direct-clear input of U156A remains HI. Therefore, U156A operates as a basic triggered flip-flop that changes output states with each positive-going Sweep Holdoff pulse at the trigger (T) input. The Sweep Holdoff pulse goes positive at the end of each sweep. The signal at the "1" output of U156A switches between the HI and LO level at one-half the rate of the Sweep Holdoff signal from the Horizontal plug-in unit. Figure 2-11 shows the time relationship between the input and output signals for this stage, and gives the resultant display with each signal combination.

Any Mode Except ALT With Sweep.

Input levels:

ALT Mode—LO

Holdoff—Pulse which changes from LO to HI at end of each sweep.

For this condition U156A still operates as a triggered flip-flop, but the emitter of Q150 is pulled LO by the ALT Mode Command from the VERT MODE switch. This

http://manoman.sqhill.com

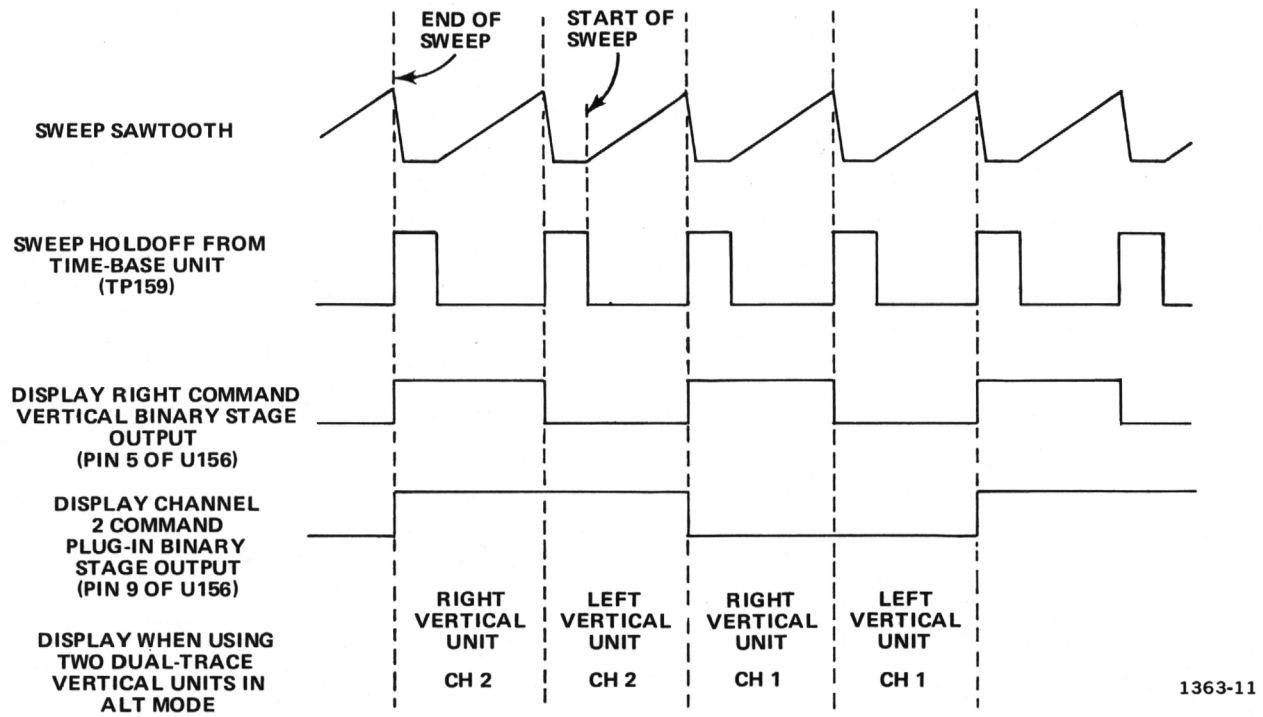

Fig. 2-11. Idealized waveforms showing relationship between input and output waveforms for Vertical Binary and Plug-In Binary stages when operating in the ALT mode.

enables Q150, but it does not change output state unless the level at the "1" output of U156A is LO. Quiescently, the collector of Q150 is HI. Therefore, when the positive-going Sweep Holdoff pulse is received at the end of the sweep, the "1" output of U156A goes HI. This activates Q150 and its output goes LO to provide a direct-clear reset to U156A. This resets the "1" output of U156A to its LO level, and Q150 is again disabled so its output returns to the HI level. The stage is now ready for the next positive-going trigger pulse. The action is the same with each trigger pulse, so the signal at the output of this stage is at the same repetition rate as the Sweep Holdoff input. Therefore, this stage is now operating as a divide-by-one counter rather than a divide-by-two counter as described under ALT Mode With Sweep. The output under this condition is used only by the Plug-In Binary stage.

No Sweep.

Input levels:

ALT Mode—Has no effect in this condition.

Sweep Holdoff—LO

Since the Vertical Binary stage can change output states only at the end of each sweep, there will be no Alternate Drive signal for either the mainframe or vertical plug-in units if a sweep is not being produced by the Horizontal plug-in unit.

Plug-In Binary

The Plug-In Binary stage consists of U156B, which is connected as a triggered flip-flop with direct-set input. The trigger input for this stage is the Display Right Command from the Vertical Binary stage. When the VERT MODE switch is set to ALT, the repetition rate of the Display Channel 2 Command output of this stage is one-fourth the Sweep Holdoff input (see waveforms in Fig. 2-11). For any position of the VERT MODE switch except ALT, the repetition rate of the output signal from this stage is one-half of the Sweep Holdoff input. A logic diagram of the Plug-In Binary stage is shown in Fig. 2-12.

Output Buffers

The output switching commands from the Logic circuit are provided through buffer stages Q132-Q137, Q142-Q147, and Q162-Q167 (see Fig. 2-2). Each of these stages includes a common-base input transistor to provide a low-impedance load for the associated driving stages. The output transistor is connected as an emitter-follower to provide isolation between the Logic circuit and other circuits within this instrument or the plug-in units.

http://manoman.sqhill.com

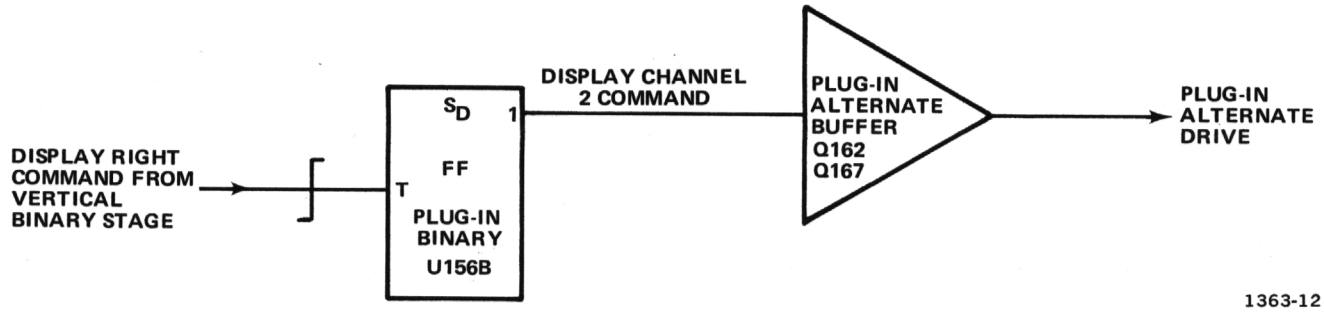

Fig. 2-12. Logic diagram of Plug-In Binary and Plug-In Alternate buffer stages.

TRIGGER SELECTOR ◇3◇ ◇7◇

The Trigger Selector circuit determines the trigger signal which is connected to the time-base unit as controlled by the TRIG SOURCE switch. Figure 2-13 shows a detailed block diagram of the Trigger Selector circuit, along with a simplified diagram of all the circuitry involved in selection of the trigger source. A schematic of the Trigger Selector circuit is shown on diagram 3 at the rear of this manual. Also, see diagram 7 for the trigger selection circuitry not shown on diagram 3.

Trigger Mode and Add Signals

The circuitry shown on the left side of Fig. 2-13 determines the operation of the Trigger Channel Switch stage. TRIG SOURCE switch S1011 controls Trigger Channel Switch U324 through Q314. When the TRIG SOURCE switch is set to the VERT MODE position, the setting of the VERT MODE switch determines the trigger selection. In the LEFT VERT or RIGHT VERT positions, the trigger signal is obtained from the indicated vertical unit. The following discussions give detailed operation in each position of the TRIG SOURCE switch.

VERT MODE. In the VERT MODE position of the TRIG SOURCE switch, the setting of the VERT MODE switch determines the operation of the Trigger Channel Switch stage. In the LEFT position of the VERT MODE switch, the base of Q314 is connected to ground through the ALT and RIGHT sections of S1021-CR1021 and S1011-CR1026. This holds Q314 reverse biased to provide a LO level to pin 4 of U324 (see Fig. 2-14).

When the VERT MODE switch is set to ALT, +5 volts is applied to the base of Q314 through CR1021 and S1011. Q314 is forward biased and its emitter level is determined by the Mainframe Channel Switch Signal from the Logic circuit applied to its collector. This signal switches between the HI level (Right Vertical unit to be displayed) and the LO level (Left Vertical unit to be displayed) at the end of each sweep. When the Mainframe Channel Switch Signal is HI, it provides a positive collector voltage to Q314. Q314 is saturated due to CR1021, and its emitter level is very near the collector level. This provides a HI output level to the Trigger Channel Switch stage. As the Mainframe Channel Switch Signal goes LO, the collector supply for Q314 also goes negative. Q314 remains saturated and the output again follows the collector level to supply a LO output level to U324.

For ADD and CHOP vertical mode operation, +5 volts is connected to pin 14 of U324 through CR1023 or CR1024 and S1011. At the same time, the base of Q314 is held LO by the ground connection through the ALT and RIGHT section of S1021. The level at pin 4 of U324 is also LO which produces an ADD mode in the Trigger Channel Switch (see description of this stage which follows). In the RIGHT position of the VERT MODE switch, +5 volts is connected to the base of Q314 through CR1026 and S1011 to forward bias the transistor. The Mainframe Channel Switch Signal connected to the collector of Q314 is also HI in this mode, and a HI output level is produced at the emitter of Q314.

LEFT VERT. When the LEFT VERT trigger source is selected, the VERT MODE switch is disconnected from the trigger selection circuitry. Now the ground connection through the RIGHT VERT section of S1011 establishes a LO output level at the emitter of Q314.

RIGHT VERT. In the RIGHT VERT position of the TRIG SOURCE switch, +5 volts is connected to the emitter of Q314 through S1011 and R312. This produces a HI output level to the Trigger Channel Switch stage.

Trigger Channel Switch

The Trigger Channel Switch stage determines which input signal provides the trigger signal to the Horizontal compartment as controlled by the Trigger Mode and ADD

http://manoman.sqhill.com

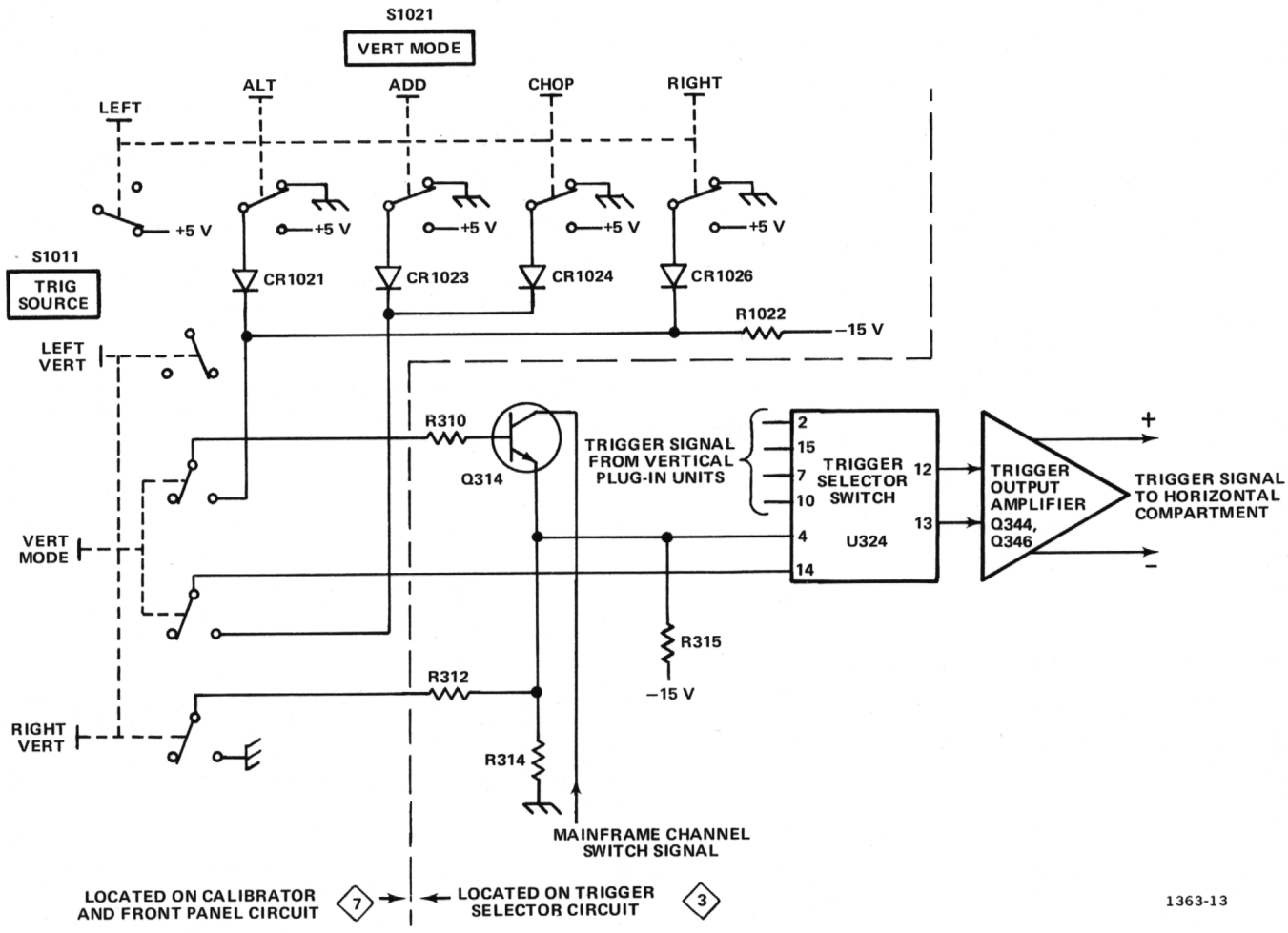

Fig. 2-13. Detailed block diagram of Trigger Selector circuit and simplified diagram of Trigger Source Selector circuits.

signals from the trigger selection circuitry. Refer to diagram 3 during the following discussion.

Resistors R317-R319 establish the input resistance and provide a load for the trigger signal from the Right Vertical plug-in unit. Resistors R307 and R308 provide the input resistance and load for the Left Vertical plug-in unit. R321-R323-R324 and R326-R327-R328 establish the operating level of the Trigger Channel Switch; R321-R323 and R326-R328 set the current gain for each channel. This stage is made up primarily of integrated circuit U324. An input/output table for U324 is shown in Fig. 2-15. U324 provides a high-impedance differential input for the trigger signal from the Left Vertical unit at pins 2 and 15, and for the trigger signal from the Right Vertical unit at pins 7 and 10. The output signal at pins 12 and 13 is a differential signal. The sum of the dc current at pins 12 and 13 is always equal to the sum of the dc currents at pins 1, 8, 9, and 16 in all modes. This provides a constant dc bias to the stages which follow as the TRIG SOURCE or the VERT MODE switches are changed.

When the level at pin 4 is LO (see Trigger Mode and ADD Signals discussions and Fig. 2-15), the trigger signal from the Left Vertical unit passes to the output, while the trigger signal from the Right Vertical unit is blocked. A HI level at pin 4 connects the trigger signal from the Right Vertical unit to the output and the trigger signal from the Left Vertical unit is blocked. For VERT MODE operation in the ALT position of the VERT MODE switch, the level at pin 4 switches between the LO and HI level at a rate determined by the Vertical Binary stage (see Logic circuit description). This action obtains the trigger signal from the Left Vertical unit when the Left Vertical unit is being displayed and from the Right Vertical unit when it is being displayed.

When the level at pin 4 is LO and the level at pin 14 is HI, the trigger signal from both the Left and Right Vertical units passes to the output pins. This condition occurs only when the TRIG SOURCE switch is set to VERT MODE and the VERT MODE switch is set to either ADD or CHOP. Under this operating mode, the trigger output signal is the

http://manoman.sqhill.com

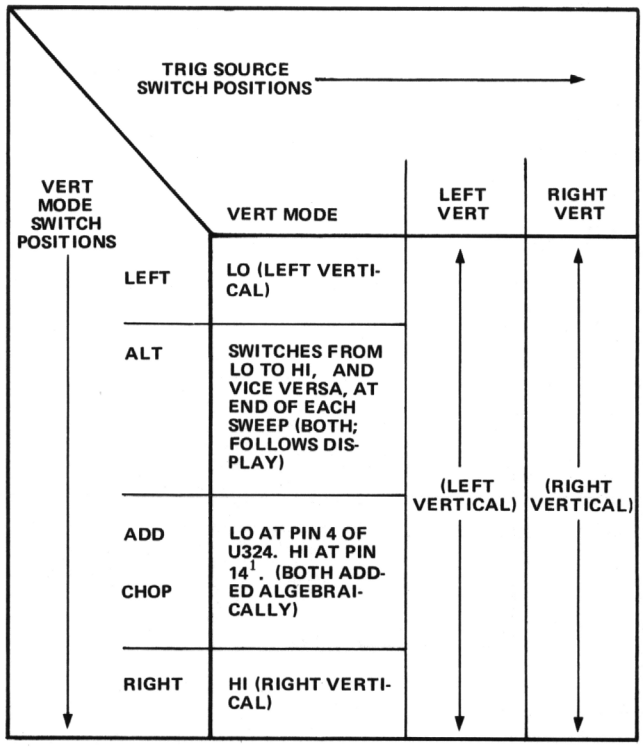

[1] PIN 14 LO FOR ALL OTHER CONDITIONS. 1363-14

Fig. 2-14. Input levels at pin 4 of U324 (source of triggering signal is shown in parenthesis).

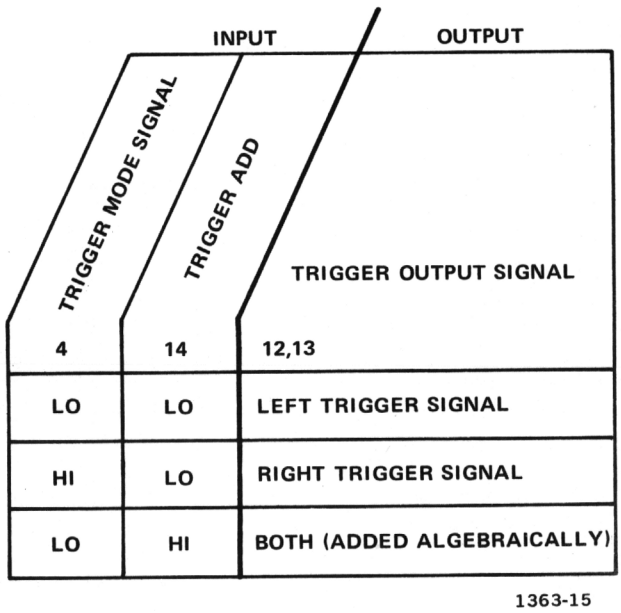

1363-15

Fig. 2-15. Input/output table for Trigger Channel Switch stage (U324).

algebraic sum of the trigger input signals from the Left and Right Vertical units to prevent triggering on the vertical chopping transition, or only on one signal of an added display.

Trigger Output Amplifier

The trigger output at pins 12 and 13 of U324 is connected to the bases of Q344-Q346 to provide the internal trigger signal for the Horizontal unit (via the Main Interface circuit). The Horizontal unit provides a 50-ohm differential load for this stage. If it is removed from its compartment, the collector load for Q344-Q346 changes and the voltage at their collectors increases. This stage prevents this change from affecting the Trigger Channel Switch stage. CR341-CR349 clamp the collectors of Q344 and Q346 at about +0.6 volt to prevent these transistors from saturating under this no-load condition.

The trigger output at pins 12 and 13 of U324 is also coupled to the emitters of Q334 and Q336 to provide a Vertical Signal output to the Signals Out circuits.

VERTICAL INTERFACE ③

The Vertical Interface circuit selects the Left Vertical or the Right Vertical plug-in unit. Figure 2-16 shows a detailed block diagram of the Vertical Interface circuit. A schematic of this circuit is shown on diagram 3 at the rear of this manual.

Vertical Channel Switch

The Vertical Channel Switch stage determines which input signal provides the vertical signal to the Delay-Line Driver stage as controlled by the Mainframe Channel Switch Signal from the Logic circuit. Resistors R200-R202 and R204-R206 establish the input resistance of this stage and provide a load for the Left and Right Vertical units. Resistors R209-R211-R212 and R216-R218-R219 establish the operating levels for this stage. R209-R212 and R216-R219 set the current gain for each channel. C208-R208 and C215-R215 provide frequency compensation.

The Vertical Channel Switch stage is made up primarily of integrated circuit U214, which is the same type as that used for the Trigger Channel Switch. An input-output table for U214 is shown in Fig. 2-17. U214 provides a high-impedance differential input for the signal from the Left Vertical unit at pins 2 and 15, and the signal from the Right Vertical unit at pins 7 and 10. The output signal at pins 12 and 13 is a differential signal, which is connected to the Delay-Line Driver stage through R222-R224. The sum of the dc output currents at pins 12 and 13 is always equal to the sum of the dc input currents at pins 1, 8, 9, and 16 in all modes. This provides a constant dc bias to the following stage as the VERT MODE switch is changed.

http://manoman.sqhill.com

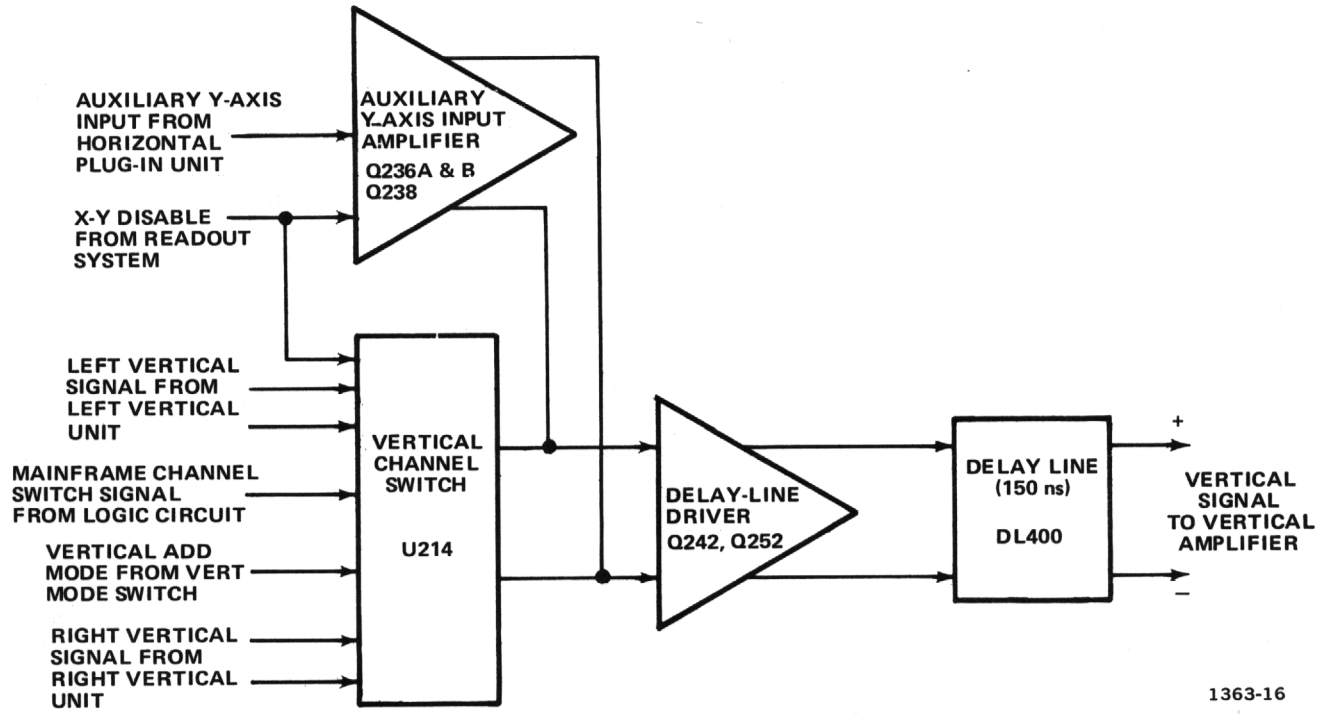

Fig. 2-16. Vertical Interface detailed block diagram.

INPUT		OUTPUT
MAINFRAME CHANNEL SWITCH SIGNAL	ADD MODE (VERT)	OUTPUT SIGNAL
4	14	12, 13
LO	LO	LEFT VERTICAL SIGNAL
HI	LO	RIGHT VERTICAL SIGNAL
LO	HI	BOTH (ADDED ALGEBRAICALLY)

1363-17

Fig. 2-17. Input/output table for Vertical Channel Switch stage (U214).

When the VERT MODE switch is set to LEFT, the level at pin 4 is LO. This level allows the signal from the Left Vertical unit to pass to the output while the signal from the Right Vertical unit is blocked. In the RIGHT position of the VERT MODE switch, the level at pin 4 is HI. Now, the signal from the Right Vertical unit is connected to the output while the signal from the Left Vertical unit is blocked.

When the VERT MODE switch is set to either ALT or CHOP, the Mainframe Channel Switch Signal at pin 4 switches between the LO and HI levels at a rate determined by either the Chop Counter or the Vertical Binary stages (see Logic circuit description). This action allows the signal from the Left Vertical unit to be displayed when the Mainframe Channel Switch Signal is LO and the signal from the Right Vertical unit is displayed when the Mainframe Channel Switch Signal is HI. When ADD vertical mode operation is selected, a HI level is applied to pin 14 and the level at pin 4 is LO as determined by the Vertical Mode Control stage in the Logic circuit. This allows both the Right and Left vertical signals to pass to the output pins. Now, the signal from both vertical units is algebraically added and the resultant signal determines the vertical deflection.

The X/Y Disable signal from the Readout System is applied to pin 6 of U214. It has final control over the output signal from U214. Quiescently, the X/Y Disable signal is LO and the signal from the selected vertical unit can pass to the output pins 12 and 13. However, when the Readout System is ready to display readout information, the level at pin 6 goes HI. This level blocks the signals from both vertical compartments and there is no output from U214 under this condition. Transistor Q238 will conduct and provide about the same current for the output stage as under normal conditions. This limits any change in positioning that would otherwise occur when the X/Y Disable signal from the Readout System is applied.

http://manoman.sqhill.com

Auxiliary Y-Axis Input Amplifier

The Auxiliary Y-Axis Input Amplifier accepts an input from horizontal plug-in units having compatible features (see Fig. 2-16). Normally, this input is a positioning voltage to offset the display. The single-ended signal connected to the input of this stage is converted to a push-pull signal at the collectors of Q236A and Q236B. This signal is connected to the Delay-Line Driver stage along with the output from the Vertical Channel Switch.

Delay-Line Driver

The output of the Vertical Channel Switch stage (U214), along with any signal from the Auxiliary Y-Axis Input Amplifier, is connected to the emitters of Q242-Q252. These transistors are connected as common-base amplifiers to provide a low-impedance current-summing point. The signal at the collectors of Q242-Q252 is connected to Delay Line DL400. Resistors R259-R261 provide reverse termination for the Delay Line.

Delay Line

Delay Line DL400 provides approximately 150 nanoseconds delay for the vertical signal, to allow the horizontal circuits time to initiate a sweep before the vertical signal reaches the vertical deflection plates of the crt. This allows the instrument to display the leading edge of the signal originating the trigger pulse when using internal triggering. The delay line used in this instrument has a characteristic impedance of about 50 ohms per side, or about 100 ohms differentially. It is of the coaxial type, which does not produce preshoot or phase distortion in the crt display.

VERTICAL AMPLIFIER ◇4

The Vertical Amplifier circuit provides final amplification for the vertical signal before it is applied to the vertical deflection plates of the crt. This circuit includes an input from the beam finder switch to compress an overscanned display within the viewing area of the crt. Figure 2-18 shows a detailed block diagram of the Vertical Amplifier circuit. A schematic of this circuit is shown on diagram 4 at the rear of this manual.

Input Amplifier

The Input Amplifier stage (Q420-Q424, Q435-Q440, and Q452-Q462) provides a low input impedance for the Vertical Amplifier circuit to permit accurate delay-line termination. C401-R401, C403-R403, and C402, along with input resistance of this stage, provide the forward termination for the Delay Line. Collector current for the Delay-Line Driver stage in the Vertical Interface circuit is provided from this stage. Vertical Centering adjustment R427 balances the quiescent dc levels in the Vertical Amplifier circuit so that the trace is displayed at the center of the crt when the inputs to this stage are at the same potential. The RC network between the emitters of Q420 and Q424 provides frequency compensation for this stage. C405-R405 in this network are adjustable to provide optimum response. The signal at the collectors of Q420-Q424 is connected to the bases of Q435-Q440. These transistors are connected as common-emitter amplifiers to provide amplification for the vertical-deflection signal. Feedback is provided from the collectors of Q435-Q440 to the emitters of Q420-Q424 through C430-R430, C415-R415, C433-R433, and C419-R419 to provide gain stabilization for this stage. Emitter followers Q452-Q462 provide isolation between the Input Amplifier and Output Amplifier stage.

Beam Finder Network

The Beam Finder Network, consisting of transistor Q444 and associated components, provides a means of locating a display that exceeds the graticule area. Under normal

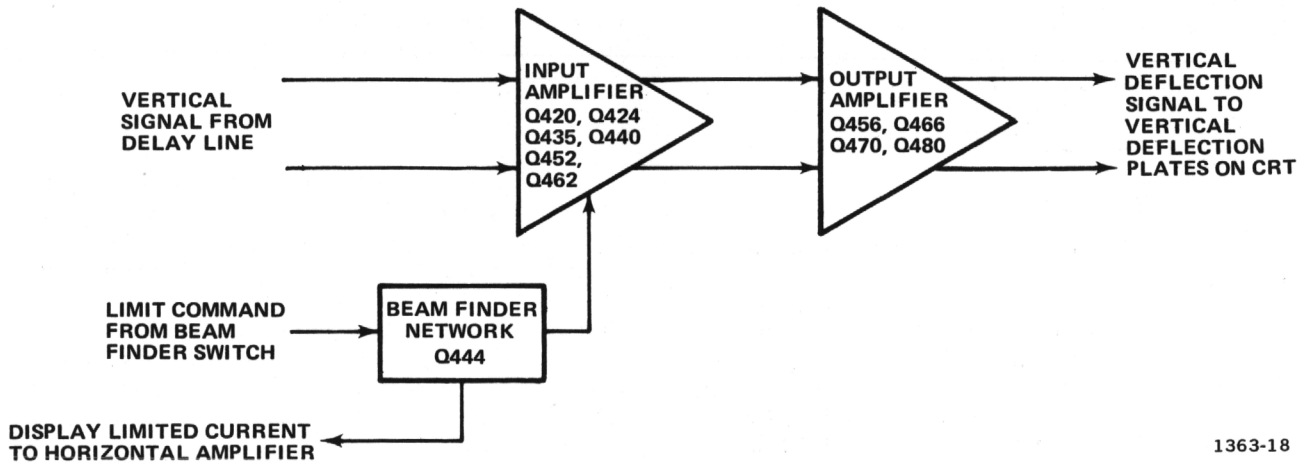

Fig. 2-18. Vertical Amplifier detailed block diagram.

http://manoman.sqhill.com

operation, −15 volts is connected to the emitters of Q435-Q440 from the BEAM FINDER switch (see diagrams 7, 9, 8, 5, and 4 for BEAM FINDER coupling detail) through CR442 and also through R437. When the BEAM FINDER switch is pressed, the −15 volts through CR442 is interrupted, so the emitter current for Q435-Q440 must be supplied through R438 and R437. R438 limits the amount of current available to Q435-Q440 to limit the dynamic range of these transistors and compress the display vertically within the graticule area. At the same time, base current is supplied to Q444 through CR442 and R443. This transistor is forward biased to supply dc current to the Output Amplifier through CR445-R447-R449 and emitter followers Q452-Q462. This keeps the Output Amplifier stage operating at about the same dc potentials, regardless of the condition of the BEAM FINDER switch. The collector level of Q444 is also connected to the Horizontal Amplifier circuit to produce a similar effect in this circuit.

Output Amplifier

The signals from Q452-Q462 are connected to the bases of Q456-Q466 in the Output Amplifier. Q456-Q466 and Q470-Q480 provide the final amplification for the vertical signal before it is applied to the vertical deflection plates of the crt. Vertical Gain adjustment R458 sets the resistance between the emitters of Q456-Q466 to set the overall gain of the vertical deflection system. Variable capacitor C469 provides further high-frequency compensation for this circuit. The output signal at the collectors of Q470-Q480 provides the vertical deflection signal for the crt. L472, L482, LR475, LR485 provide additional high-frequency compensation.

HORIZONTAL AMPLIFIER ⑤

The Horizontal Amplifier circuit amplifies the push-pull horizontal deflection signals from the plug-in unit in the horizontal compartment and connects it to the horizontal deflection plates of the crt. Figure 2-19 shows a detailed block diagram of the Horizontal Amplifier circuit. A schematic of this circuit is shown on diagram 5 at the rear of this manual.

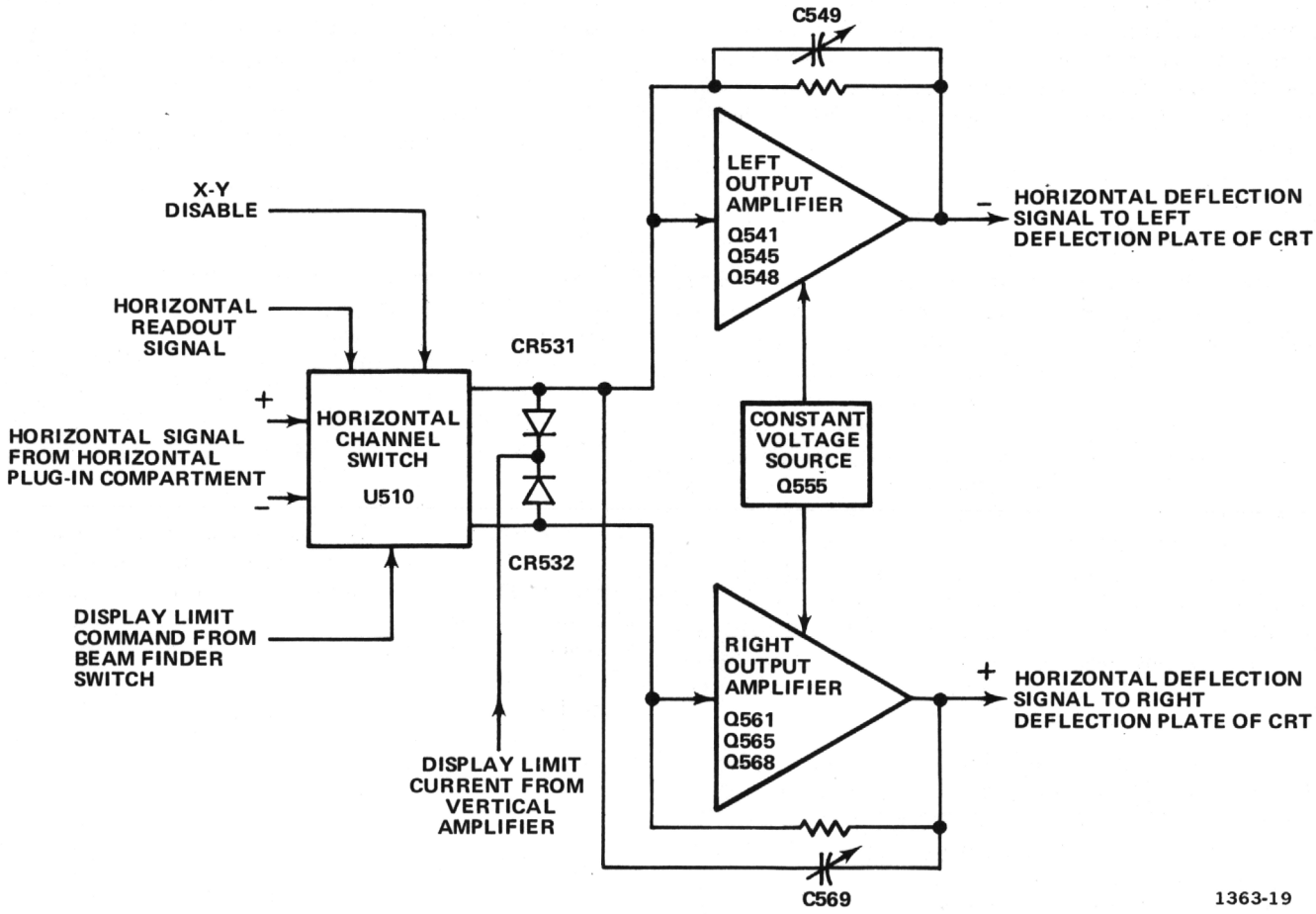

Fig. 2-19. Horizontal Amplifier detailed block diagram.

http://manoman.sqhill.com

Horizontal Channel Switch

The horizontal signals from the plug-in unit in the Horizontal compartment are connected to pin 2 and pin 15 of U510. The Readout signal is connected to pin 7 of U510. Integrated circuit U510 determines which input signal will provide the signal for the Horizontal Amplifier circuit, as controlled by the X/Y Disable signal at pin 4 of U510 from the Readout System. When the X/Y Disable is LO, the signal from the Horizontal compartment is passed to the output of U510. When the X/Y Disable is HI, the Readout signal is passed to the output of U510. Resistors R514, R515, R521, and R522 establish the current levels for this circuit. R512 provides gain adjustment and R511 establishes the gain range. The output signal is a differential signal that is connected to the Horizontal Amplifier circuit.

For normal operation, the BEAM FINDER switch supplies −15 volts to the gain and current level resistors through the LIMIT COMMAND at pin 2 of P570 (see diagrams 7, 9, 8, 5, and 4 for BEAM FINDER coupling detail). When the BEAM FINDER switch is activated, the −15 volt supply is removed from the LIMIT COMMAND line. The current is supplied to U510 through R523 at a limited level, thereby horizontally compressing the display. Simultaneously, dc current is added to the circuit through CR531 and CR532 from the Vertical Amplifier via the limit current line at pin 1 of P540. The added current through CR531 and CR532 maintains the same dc currents through the output stages in both positions of the BEAM FINDER switch.

Output Amplifier

The push-pull output of the Horizontal Channel Switch (U510) is connected to the Output Amplifier through CR535 and CR536. Each half of the Output Amplifier can be considered as a single-ended feedback amplifier which amplifies the signal current at the input to produce a voltage output to drive the horizontal deflection plates of the crt. The amplifiers have a low input impedance and require very little voltage change at the input to produce the desired output change. Q555 is a bias voltage source. The base of Q555 is biased to set the emitter at approximately +5 volts and the anode of CR552 is at approximately +6.5 volts. This sets the base of Q541 and Q561 very near the same quiescent dc level. CR535 and CR536 become back biased and are turned off when overdrive in the positive direction occurs at their cathodes.

Transistors Q541 and Q561 are inverting amplifiers whose collector signals drive the emitters of complementary amplifiers Q545-Q548 and Q565-Q568 respectively. The output signal from complementary amplifier Q545-Q548 drives the left horizontal deflection plate of the crt. The output signal from complementary amplifier Q565-Q568 drives the right horizontal deflection plate. C549 and C569 adjust the transient response of the amplifier to provide good linearity at fast sweep rates.

OUTPUT SIGNALS ◇6◇

The Output Signals circuit provides signals to the signal output connectors on the instrument rear panel. These output signals are either generated within the instrument or are samples of signals from the associated plug-in units. The schematic for the output signals is shown on diagram 6 at the rear of the manual.

VERT SIG OUT

The vertical output signal is coupled from the Trigger Selector circuits to the bases of differential amplifier Q606 and Q618. The vertical signal is taken single-ended from Q618 and coupled through output buffer Q620 to the VERT SIG OUT connector. The source of the vertical output signal is selected by the TRIG SOURCE switch S1011 (refer to Trigger Selector discussion in this section). CR621 and CR622 provide protection against high voltage inputs applied to the VERT SIG OUT connector.

+ SAWTOOTH OUT

The sawtooth output signal is coupled from Interface connector pins A3, B3 to negative feedback amplifier Q631, Q634, and Q640. Gain for the stage is approximately two as determined by the ratio of feedback resistor R645 to the input resistance R630 and R36 (see diagram 1). CR635 and CR641 provide protection against high-voltage inputs applied to the + SAWTOOTH OUT connector.

+ GATE OUT

The + GATE OUT signal is selected from one of three gate signals from Gate Selector switch S659: (1) the Sweep Gate signal from Interface connector pin A1 in the Horizontal plug-in compartment, (2) the Aux Sweep Gate signal from Interface connector pin B5 in the Horizontal plug-in compartment, (3) the Delay Gate signal from Interface connector pin B9 in the Horizontal plug-in compartment.

The output from the Gate Selector switch is coupled through R660 to gate comparator Q662 and Q666. The base of Q662 connects to the + gate signal and the base of Q666 is referenced to ground. The signal from the comparator (collector of Q666) is coupled through output buffer Q672 to the + GATE OUT connector. CR672 provides temperature compensation for Q672. CR674 and CR676 provide protection against high voltage inputs applied to the + GATE OUT connector.

CALIBRATOR AND FRONT PANEL SWITCHING ◇7◇

The Calibrator and Front Panel Switching circuits provide output voltage to the front-panel CALIBRATOR

http://manoman.sqhill.com

pin-jacks and includes front-panel switches and controls. Figure 2-20 shows a detailed block diagram of the Calibrator portion of this circuit. A schematic of this circuit is shown on diagram 7 at the rear of the manual.

Mode Switch Logic

The VERT MODE switch determines the operating mode of the Vertical Interface circuit. The levels established by this switch are also used in various other circuits throughout the instrument. This switch is designed so it is self-cancelling (i.e., only one button can be pressed at a time). Specific operation of this switch is described in connection with the circuits that it controls.

The TRIG SOURCE switch controls the operation of the Trigger Selector circuit. This switch is also self-cancelling so only one of the buttons can be pressed at a time. Operation of this switch is discussed in connection with the Trigger Selector circuit.

Calibrator

The Calibrator circuit provides accurate voltage output at the front-panel CALIBRATOR pin-jacks. Repetition rate of the output signal is approximately one kilohertz.

Q1061 and Q1066 are connected as a square-wave oscillator to determine the repetition rate of the Calibrator circuit. Oscillation occurs as follows: Assume that Q1061 is conducting and Q1066 is off. The collector current of Q1061 through R1061 produces a voltage level which holds the base of Q1066 low. This keeps Q1066 turned off, and since there is no current through it, its collector goes positive to produce the positive level of the square wave. At the same time, C1064 begins to charge toward −15 volts through R1069. The emitter of Q1066 goes negative also as C1064 charges, until it reaches a level about 0.6 volt more negative than the level at its base. Then, Q1066 is forward biased and its emitter rapidly rises positive. Since C1064 cannot change its charge instantaneously, the sudden change in voltage at the emitter of Q1066 pulls the emitter of Q1061 positive also, to reverse bias it. The current through Q1066 produces a voltage drop at its collector to produce the negative level of the square wave.

Now, conditions are reversed. Since Q1061 is reverse biased, there is no current through it. Therefore, C1064 can begin to discharge through R1063. The emitter level of Q1061 follows the discharge of C1064 until it reaches about −0.6 volt. Then, Q1061 is forward biased and its collector drops negative to reverse bias Q1066. This interrupts the current through Q1066, and its collector goes positive again to complete the square wave. Once again, C1064 begins to charge through R1069 to start the second cycle. The signal produced at the collector of Q1066 has a repetition rate of approximately one kilohertz.

The calibrator output can be changed from 1 kilohertz output to dc output by changing multi-pin connector jumper P1066. In the dc position, the oscillator (Q1061, Q1066) is disabled and the collector of Q1066 rises positive. This produces a positive dc voltage output to the front-panel CALIBRATOR pin-jacks.

Output Amplifier

Transistor Q1070 and Q1072 are connected as a comparator; the reference level at the base of Q1072 is determined by the network R1073-R1074-R1076-R1077. The 4 Volts adjustment, R1077, is set to provide accurate output voltage at the 4 V CALIBRATOR pin-jack.

The output of the Oscillator stage is connected to the base of Q1070. This signal controls the conduction of comparator Q1070-Q1072. When the base of Q1070 is high, it is off and Q1072 is conducting. This produces a positive output voltage at the CALIBRATOR pin-jacks. When the level at the base of Q1070 is switched low, Q1070 conducts and Q1072 is reverse biased. Now, the voltage level at the CALIBRATOR pin-jacks drops to zero.

Output Voltage Divider

The collector current of Q1072 in the Output Amplifier stage is applied across the voltage divider made up of

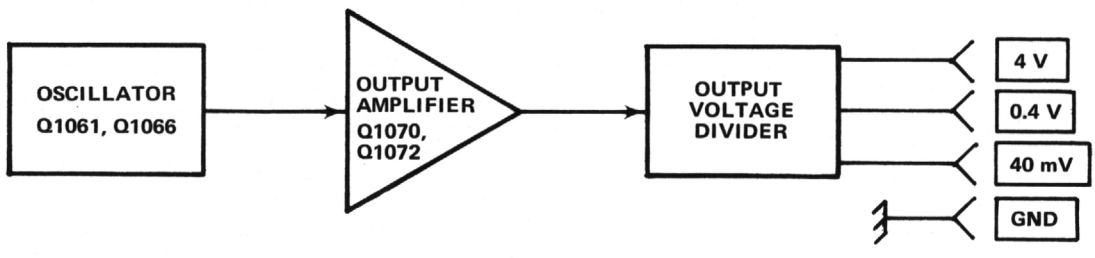

Fig. 2-20. Calibrator detailed block diagram.

http://manoman.sqhill.com

resistors R1079 through R1085. This divider is designed to provide a low output resistance in the 40 mV and 0.4 V positions while providing accurate output voltages. The output resistance at the 4 V pin-jack is about 450 ohms; at the 0.4 V and 40 mV pin-jacks, about 50 ohms.

CRT CIRCUIT ⑧

The CRT Circuit provides the high-voltage potentials and provides the control circuits necessary for operation of the cathode-ray tube (crt). This circuit also includes the Z-Axis Amplifier stage to set the intensity of the crt display. Figure 2-21 shows a detailed block diagram of the CRT circuit. A schematic of this circuit is shown on diagram 8 at the rear of the manual.

Z-Axis Amplifier

The Z-Axis Amplifier stage provides the drive signal to control the crt intensity level.

The Z-Axis signal from the Logic circuit and the Z-Axis signal from the Readout System are connected to the emitter of Q1107. Common-base amplifier Q1107 establishes a low-input impedance for the Z-Axis current-driver operational amplifier (Q1148, Q1152, Q1154, Q1156). The input and output transistors are complementary to provide a fast rise-time and a fast fall-time response; R1152 establishes a low current level for the series-coupled output transistors.

Input transistor Q1148 supplies additional current for positive transitions and Q1156 supplies additional current for negative transitions. R1158, R1159 and C1158 provide the feedback element for the operational amplifier. Variable capacitor C1158 provides a fast-rise unblanking gate with minimum overshoot, thereby ensuring a crt display of uniform intensity. The Z-Axis signal is coupled to the crt control grid through the Control Grid DC Restorer.

High Voltage Oscillator

The High Voltage Oscillator produces a 30 to 40 kilohertz sine wave across the primary of T1225. The amplitude of the oscillations in the primary of T1225 is controlled by the High Voltage Regulator to set the total accelerating potential for the crt.

Power for operation of the high-voltage supply is from the +15-volt and −15-volt supplies. At the time of turn on, CR1215 disconnects the −15-Volt Supply from the collector of Q1214. This allows Q1214 to turn on and supply

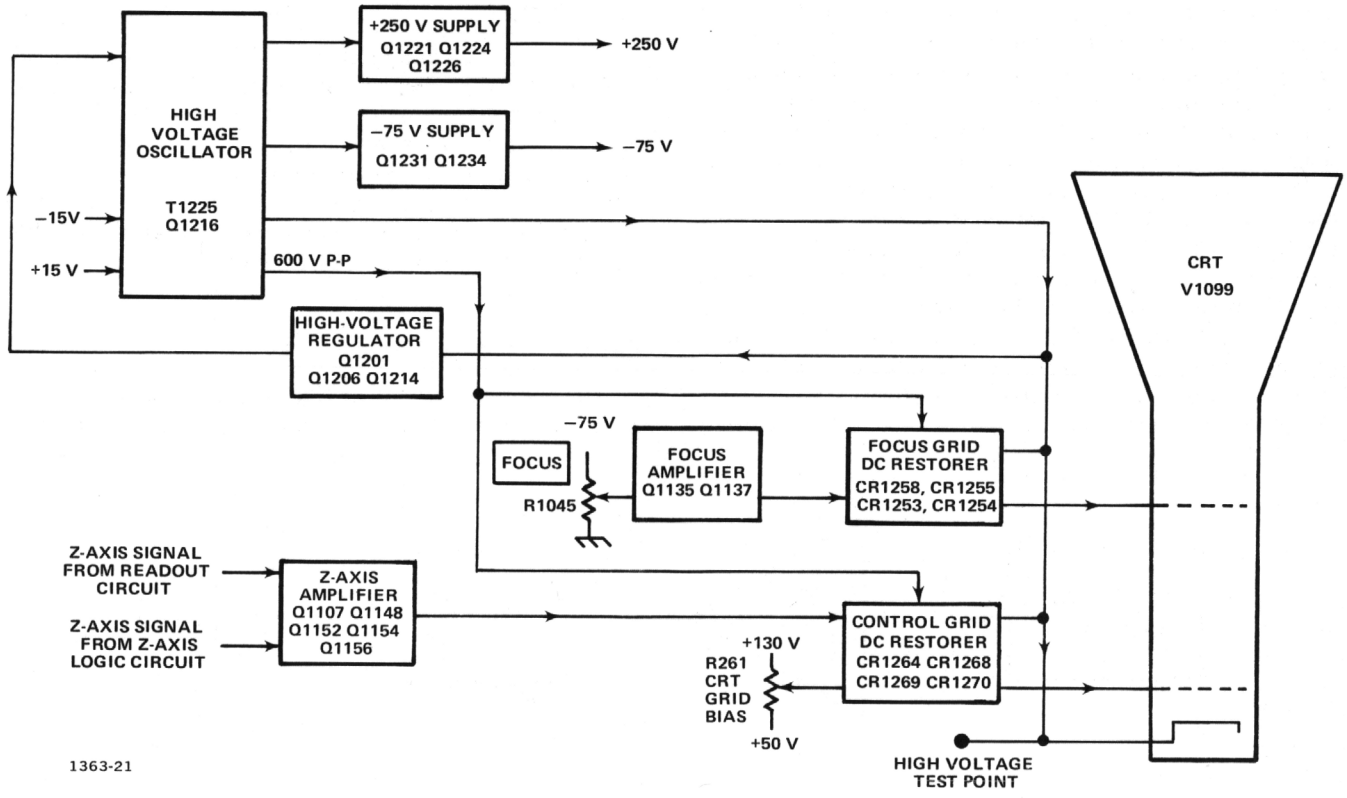

Fig. 2-21. Cathode-Ray Tube circuit detailed block diagram.

http://manoman.sqhill.com

starting base-bias current for the High Voltage Oscillator (Q1216, T1225) while the emitter potential of Q1216 is established by the −15-Volt Supply. As the output of the high-voltage supply increases to its required output level, the collector of Q1214 goes negative until CR1215 is forward biased, clamping the collector level of Q1214 to approximately −15.6 volts. This configuration provides a controlled starting current for the High Voltage Oscillator at turn on, and at the same time allows the High Voltage Regulator stage (Q1201, Q1206, Q1214) to control the current for the High Voltage Oscillator after the stage reaches operating potentials.

Q1216, T1225, and associated circuitry compose the High Voltage Oscillator. After initial turn on, the collector current of Q1216 produces a corresponding current increase in the base-feedback winding of T1225 to further increase the bias on Q1216. As long as the collector current of Q1216 continues to increase, voltage is induced into the base-feedback windings of T1225, which holds Q1216 forward biased. However, when the collector current of Q1216 stabilizes, the magnetic field in T1225 begins to collapse. This induces an opposite current into the base windings that reverse biases Q1216. As the current through the collapsing field stabilizes, the magnetic field in T1225 once more begins to collapse. The conditions reverse and Q1216 turns on to begin another cycle. Filter network C1219 and L1219 decouples high peak operating current from the +15-Volt and −15-Volt Supplies.

High Voltage Regulator

The High Voltage Regulator circuits control the current for the High Voltage Oscillator to provide a regulated high-voltage output.

A sample of the secondary voltage from T1225 is connected to the High Voltage Regulator stage through divider R1243-R1245A-R1245B. Q1201 and Q1206 are connected as an error amplifier to sense any change in the voltage level at the base of Q1201. The −15-Volt supply, connected to the emitter of Q1201 through R1202, and the +50-Volt supply connected through CR1244 to R1245A, provide the reference levels for this stage. The output level is set by the fixed values of the components in this circuit.

Regulation occurs as follows: If the output voltage at the −3960 V test point starts to go positive (less negative), a sample of this positive-going change is connected to the base of Q1201 through R1245B and R1241. Both Q1201 and Q1206 are forward biased by this positive change, which in turn increases the conduction of Q1214. This biases the base of Q1216 closer to the conduction level so that the feedback voltage induced into the base-feedback winding produces a larger collector current. This results in a larger induced voltage in the secondary of T1225 to produce a more negative level at the −3960 V test point to correct the original error. In a similar manner, the circuit compensates for output changes in a negative direction.

Voltage Supplies

The high-voltage transformer provides filament voltage for the crt, provides the negative accelerating potential to the crt cathode, provides the bias voltage for the crt control grid, and provides the +250 and −75-Volt Supplies.

The transformer windings connected to pins 14 and 23 of T1225, and CR1281 form a half-wave rectifier to provide a negative accelerating potential to the crt cathode. Approximately −3.96 kilovolts is connected to the crt cathode through R1282. The cathode and filament are connected together through R1275 to prevent cathode-to-filament breakdown due to a large difference in potential between these crt elements. A sample of the negative accelerating voltage is connected to the High Voltage Regulator to maintain a regulated high-voltage output.

The transformer windings connected to pins 20 and 22 of T1225, plus CR1230 and C1230 make up a half-wave rectifier with an approximate 30-volt output. The −30 volts is stacked on the emitter potential of Q1231 to provide a −75-volt output. The emitter potential of Q1231 is controlled by common-emitter amplifier Q1234, which is referenced to the −50-Volt Supply. R1238 and R1237 provide negative feedback to regulate the output to −75 volts.

The transformer windings connected to pins 16 and 18 of T1225, plus CR1220 and C1220 make up a half-wave rectifier with approximately +125-volt output. Q1224, Q1226 form a high-gain inverting amplifier that controls emitter follower Q1221. Feedback is provided by R1228, R1229, and the −50-Volt Supply to regulate the output to the +250 volts. During normal operation, CR1226 is forward biased and provides base bias for Q1226, setting its emitter to zero volts (the amplifier summing point). At turn on, C1223 is discharged and CR1226 is reverse-biased. This sets the emitter of Q1226 to −50 volts which disables the +250-Volt Supply, ensuring that T1225 will not saturate. If saturation is not prevented, the High Voltage Oscillator will not begin oscillation at turn on.

After initial turn on, C1222 couples oscillations to CR1223 and forward biases CR1226. This enables the +250-Volt Supply.

Focus Amplifier and Focus Grid DC Restorer

The Focus Amplifier consists of common-emitter amplifier Q1135 and emitter-follower Q1137. Feedback resistor

http://manoman.sqhill.com

R1138 and input resistors R1131 and R1132 provide for a zero-volt to +250-volt output, depending on the setting of the front-panel FOCUS control R1045. The Focus Amplifier output is coupled to the Focus Grid DC Restorer circuit.

The Focus Grid DC Restorer circuit allows the crt focus grid to be controlled from a low-voltage point in the circuit. The potential difference between the FOCUS control (R1045) and the crt focus grid (approximately 4000 volts) prohibits direct coupling.

The DC Restorer (consisting of CR1258, CR1255, CR1253, CR1254, and associated circuitry) is actually a bias supply for the crt focus grid. This stage is referenced to the voltage determined by the −3960-volt cathode potential, divider network R1245D, Focus Preset adjustment R1250, and R1245C.

Approximately 600 volts peak-to-peak from pins 12 to 14 of T1225 provides the drive signal for the DC Restorer circuit through C1257 and R1257. The Focus circuit (Focus control R1045, Q1135, and Q1137) varies the dc voltage at the cathode of CR1258 from zero volts to +250 volts.

During negative half cycles of drive signal, CR1255 clamps the drive signal near ground. C1255 is charged to the negative reference voltage (approximately three kilovolts, determined by the Focus Preset Adjustment R1250). During positive half cycles the drive signal is coupled through C1255 and rectifier CR1254 to C1254. The amplitude of the positive half cycle is determined by the dc voltage at the cathode of CR1258. The positive drive signal changes the charge of C1254, which sets the focus grid to a less negative level. When the drive signal falls negative, CR1253 forward biases to maintain the negative reference voltage across C1255. Resistors R1253, R1254, and R1255 provide protection against transients.

Control Grid DC Restorer

The Control Grid DC Restorer couples dc and low-frequency components of the Z-Axis Amplifier signal to the crt control grid. This allows the Z-Axis Amplifier to control the crt beam current (intensity). The potential difference between the Z-Axis Amplifier output and the control grid (approximately 4000 volts) prohibits direct coupling.

The Control Grid DC Restorer (consisting of CR1264, CR1268, CR1269, CR1270, and associated circuitry) is actually a cathode-referenced bias supply for the crt control grid. Quiescently, its output voltage is more negative than the cathode by an amount set by CRT Grid Bias adjustment R1261. The output of the Z-Axis Amplifier varies the control grid potential somewhere between the cathode potential and the more negative level.

Approximately 600 volts peak-to-peak, from pins 12 and 14 of T1225, provides the drive signal for the dc restorer circuit through C1266 and R1266. CR1264 and CR1268 clip the drive signal to the level set by the CRT Grid Bias adjustment R1261 and the output of the Z-Axis Amplifier.

Positive half cycles of drive signal are coupled through CR1270, however, the High Voltage Regulator maintains the cathode voltage at −3960 volts. During negative half cycles, the drive signal is coupled through CR1269 to drive the control grid more negative than the cathode and blank the crt.

The unblanking gate, developed by the Z-Axis Amplifier stage, is applied to C1269 through R1157. The fast-rising and fast-falling portions of this signal are coupled to the control grid through C1269. The overall effect of the unblanking gate is to reduce the negative clipping level of CR1268, thereby reducing the negative voltage added to the cathode potential. This reduces the difference in voltage between the control grid and cathode of the crt so that a display can be viewed. Resistors R1269, R1270, and R1263 provide protection against transients.

CRT Control Circuits

The front-panel FOCUS control R1045 varies the bias supply for the crt focus grid (see the CRT Focus Grid DC Restorer discussion). The CRT Grid Bias adjustment R1261 sets the level of the crt control-grid drive signal (see CRT Control Grid DC Restorer discussion). Geometry controls R1184 and R1485 vary the positive level on the horizontal deflection-plate shield to control the overall geometry of the display. Astig adjustment R1193 is used in conjunction with the FOCUS control to obtain a well-defined display. Trace Rotation adjustment R1181 controls the current through L1099, which affects both the vertical and horizontal rotation of the beam.

LOW VOLTAGE POWER SUPPLY ◈9◈

The Low Voltage Power Supply circuit provides the operating power for this instrument from six regulated supplies. Electronic regulation is used to provide stable low-ripple output voltages. Each supply contains a short-protection circuit to prevent instrument damage if a supply is inadvertently overloaded or shorted to ground. Fig. 2-22 shows a detailed block diagram of the Low Voltage Power Supply circuit. A schematic of this circuit is shown on diagram 9 at the rear of this manual.

http://manoman.sqhill.com

Power Input

Power is applied to the primary of transformer T801 through line fuse F1000, thermal cutout S1000, and POWER switch S1001. The Voltage-Selector Jumper, P1001, connects the two halves of the primary of T801 in parallel for 110-volt (nominal) operation. Voltage-Selector Jumper P1002 connects the two halves of the primary in series for 220-volt (nominal) operation. The line fuse, F1000, must be changed to provide the correct protection for 220-volt nominal operation. Option 3 includes a line filter (FL1000) to reduce electromagnetic interference.

Each half of the primary of T801 has taps above and below the 110-volt (220-volt) nominal point. When the Voltage-Selector Jumper is moved from LOW to MED to HI, more turns are effectively added to the primary winding and the turns ratio is decreased to compensate for the increased primary voltage. This configuration extends the regulating range of the 7313/R7313.

The fan for forced-air cooling (R7313 only) is connected in parallel with one of the transformer primary windings, and always has the same voltage applied regardless of the selection of the primary jumpers. Option 5 provides a special fan circuit that operates at line frequencies from 50 hertz to 440 hertz.

Thermal cutout S1000 provides thermal protection for this instrument. If the internal temperature of the instrument exceeds a safe operating level, S1000 opens to interrupt the applied power. When the temperature returns to a safe level, S1000 automatically closes to reapply the power.

–50-Volt Supply

The following discussion includes the description of the –50-Volt Rectifier, –50-Volt Series Regulator, –50-Volt Feedback Amplifier, –50-Volt Reference, and –50-Volt Current Limiting stages. Since these stages are closely related in the production of the –50-Volt regulated output, their operation is most easily understood when discussed as a unit.

The 50-Volt Rectifier assembly CR808 rectifies the output at the secondary of T801 to provide the unregulated voltage source for both 50-Volt Supplies. CR808 is connected as a bridge rectifier and its output is filtered by C808-C809. Transistors Q886, Q896, Q900 operate as a feedback-stabilized regulator circuit to maintain a constant –50-Volt output level. Q886 is connected as a differential amplifier to compare the feedback voltage at the base of Q886B against the reference voltage at the base of Q886A. The error output at the collector of Q886B reflects the difference, if any, between these two inputs. The change in error output level at the collector of Q886B is always opposite in direction to the change in the feedback input at the base of Q886B (out of phase).

Zener diode VR890 sets a reference level of about –9 volts at the base of Q886A. A feedback sample of the output voltage from this supply is connected to the base of Q886B through divider R880-R881-R882. R881 in this divider is adjustable to set the output level of this supply. Note that the feedback voltage to this divider is obtained from a line labeled –50-Volt Sense. Fig. 2-23 illustrates the reason for this configuration. The inherent resistance of the interconnecting wire between the output of the –50-Volt Supply and the load produces a voltage drop that is equal to the output current multiplied by the resistance of the interconnecting wire. Even though the resistance of the wire is small, it results in a substantial voltage drop due to the high output current of this supply. Therefore, if the feedback voltage were obtained ahead of this drop, the voltage at the load might not maintain close regulation. However, the –50-Volt Sense feedback configuration overcomes this problem, since it obtains the feedback voltage from a point as close as practical to the load. Since the current in the –50-Volt Sense line is small and constant, the feedback voltage is an accurate sample of the voltage applied to the load.

Regulation occurs as follows: If the output level of this supply decreases (less negative) due to an increase in load, or a decrease in input voltage (as a result of line voltage changes or ripple), the voltage across divider R880-R881-R882 decreases also. This results in a more positive feedback level at the base of Q886B than that established by the –50-Volt Reference stage at the base of Q886A. Since the transistor with the more positive base controls the conduction of the differential amplifier, the output current at the collector of Q886B increases. This increase in output from Q886B allows more current to flow through Q896 and Q900 to result in increased conduction of –50-Volt Series Regulator Q903. The load current increases and the output voltage of this supply also increases (more negative). As a result, the feedback voltage from the –50-Volt Sense line increases and the base of Q886B returns to the same level as the base of Q886A. Similarly, if the output level of this supply increases (more negative), the output current of Q886B decreases. The feedback through Q896 and Q900 reduces the conduction of the –50-Volt Series Regulator to decrease the output voltage of this supply.

The –50 Volt adjustment, R881, determines the divider ratio to the base of Q886B and thereby determines the feedback voltage. This adjustment sets the output level of the supply in the following manner: If R881 is adjusted so the voltage at its variable arm goes less negative (closer to ground), this appears as an error signal at the base of Q886B. In the same manner as described previously, this

http://manoman.sghill.com

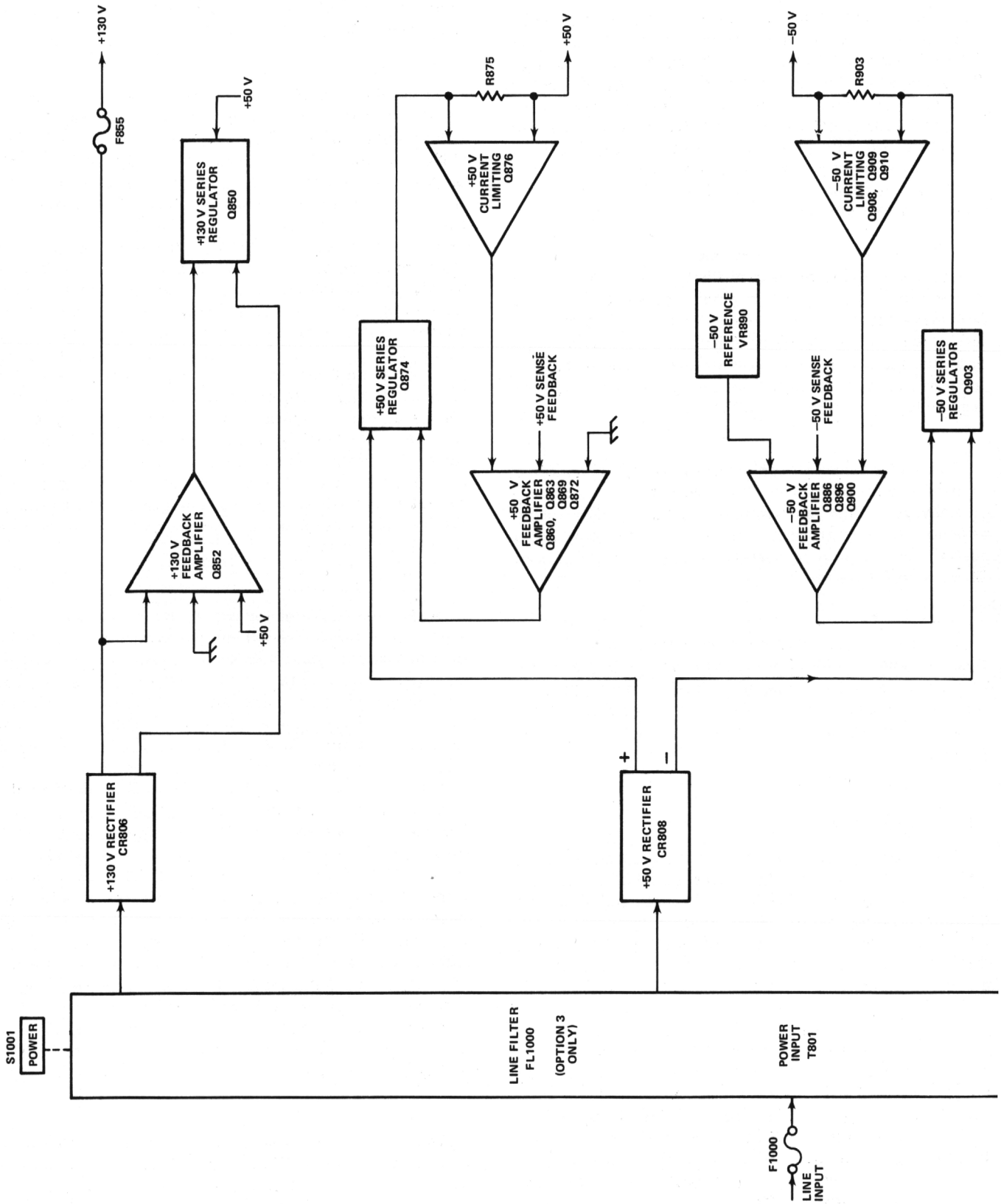

Fig. 2-22. Low Voltage Power Supply detailed block diagram.

http://manoman.sqhill.com

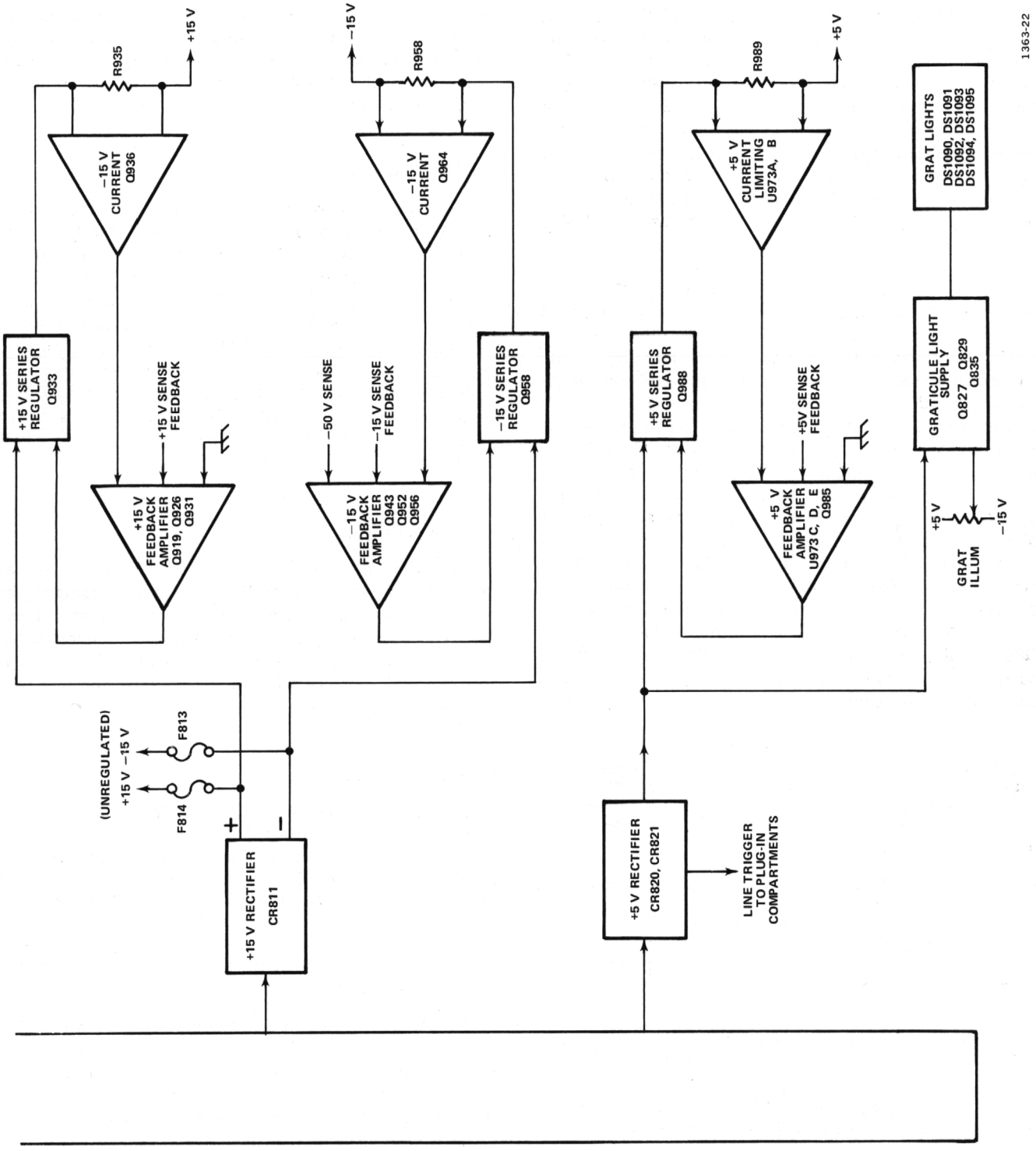

Fig. 2-22 (cont).

http://manoman.sqhill.com

positive-going change at the feedback input of the differential amplifier increases the conduction of the —50-Volt Series Regulator to produce more current to the load, and thereby increases the output voltage of this supply. This places more voltage across divider R880-R881-R882 and the divider action returns the base of Q886B to about —9 volts. Notice that the feedback action of this supply forces a change in the output level that always returns the base of Q886B to the same level as the base of Q886A. In this manner, the output level of the —50-Volt Supply can be set to exactly —50 volts by correct adjustment of R881.

The —50-Volt Current Limiting stage Q908-Q909-Q910 protects the —50-Volt Supply if excess current is demanded from this supply. All of the output current from the —50-Volt Supply flows through R903. Transistor Q908 senses the voltage at the collector of the —50-Volt Series Regulator Q903 and compares it against the —50-volt output level at the base of Q909 that is obtained from the other side of R903. Under normal operation, Q908 is held in conduction and Q909 is off. However, when excess current is demanded from the —50-Volt Series Regulator due to a short circuit or similar malfunction at the output of this supply, the voltage drop across R903 increases until the base of Q908 goes more negative than the level at the base of Q909. Then Q909 takes over conduction of the comparator. The collector current of Q909 increases the voltage drop across R896 to reduce the conduction of Q896 in the —50-Volt Feedback Amplifier and limit the conduction of Q903. Q910 is connected as a constant-current source for Q908-Q909.

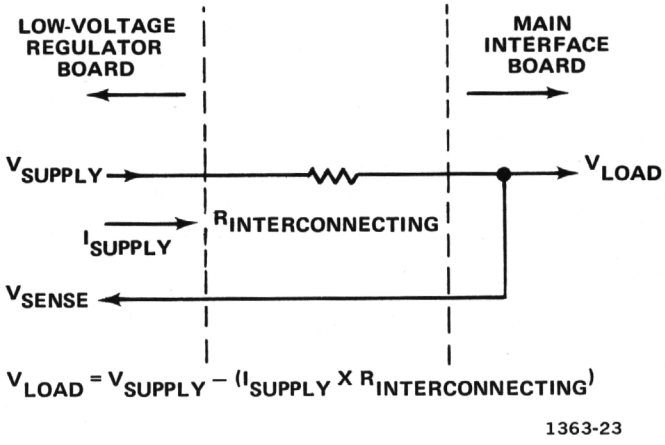

Fig. 2-23. Schematic illustrating voltage drop between power supply output and load due to resistance of interconnecting wire.

—15-Volt Supply

Basic operation of all stages in the —15-Volt Supply is the same as for the —50-Volt Supply. Reference level for this supply is established by divider R945-R946 between ground and the —50-Volt Sense voltage. The divider ratio of R945-R946 sets a level of —15 volts at the base of Q943A. The level on the —50-Volt Sense line is held stable by the —50-Volt Supply as described previously. The —15-Volt Sense voltage is connected to the base of Q943B through R940. Any change at the output of the —15-Volt Supply appears at the base of Q943B as an error signal. The output voltage is regulated in the same manner as described for the —50-Volt Supply.

+5-Volt Supply

Basic operation of the +5-Volt Supply is the same as described for the previous supplies. The +5-Volt Current Limiting and +5-Volt Feedback Amplifier (except for Q985) is made up of five-transistor array U973. Notice that both U973C and Q985 in the +5-Volt Feedback Amplifier are connected as emitter followers, since inversion is not necessary in the feedback path for positive output voltages. Reference voltage for the +5-Volt Feedback Amplifier stage is established by divider R970-R971 between the +5-Volt Sense and —50-Volt Sense feedback voltages. This divider establishes a quiescent level of about zero volts at the base of U973E.

+15-Volt Supply

Operation of the +15-Volt Supply is the same as described for the +5-Volt Supply. Discrete components replace the transistor array used in the +5-Volt Supply; however, basic operation is the same. The unregulated +15-Volt Supply provides the source voltage for the High Voltage Oscillator stage in the CRT Circuit through fuse F814 and P870.

+50-Volt Supply

Operation of the +50-Volt Supply is the same as described for the +5-Volt Supply. Discrete components replace the transistor array used in the +5-Volt Supply; however, basic operation is the same. The unregulated +50 volts from +50-Volt Rectifier CR808 is used to provide a positive starting voltage for the —50-Volt Supply.

+130-Volt Supply

The +130-Volt Rectifier CR806 provides the rectified voltage for the +130-Volt Supply. However, this secondary winding of T801 does not supply the full potential necessary to obtain the +130-volt output level. To provide the required output level, the +50-Volt Supply is connected in series with this supply through Q850. Basic regulation of the output voltage is provided by +130-Volt Series Regulator Q850.

The output voltage of this supply is connected across divider R855-R856. This divider provides a quiescent level of about +50 volts at the base of Q852. The reference level for this supply is provided by the +50-Volt Supply connected to the emitter of Q852. If the output of this

http://manoman.sqhill.com

supply changes, this change is sensed by Q852 and an amplified error signal is connected to the base of Q850. This error signal changes the conduction of the +130-Volt Series Regulator Q850 to correct the output error. Fuse F855 protects this supply if the output is shorted. However, since the response time of F855 is slow to a shorted condition, VR851 provides additional current to the base of Q850 to protect Q852 from damage. Diode CR852 limits the reverse bias on Q852 to about 0.6 volt when F855 is blown.

Graticule Light Supply

Power for the graticule lights is supplied by the Graticule Light Supply. Rectified voltage for this supply is provided by 5-Volt Rectifier CR820-CR821. Q835 operates as a series regulator transistor. Emitter follower Q829 determines the conduction of this series regulator as controlled by front-panel GRAT ILLUM Control R1095. Current limiting to protect this supply is provided by Q827. Under normal operation, divider R830-R831-R833 sets the base of Q827 below its conduction level. However, if excess current is demanded from this supply, the voltage drop across R837-R838 increases until Q827 comes into conduction. The collector of Q827 then limits the conduction of this supply to limit its output current.

Divider R822-R823 provides a sample of the line voltage in the secondary of T801 to the plug-in units for internal triggering at line frequency or for other applications.

STORAGE CIRCUIT ◈10

The Storage Circuit provides the voltage levels necessary to operate the flood guns, collimation electrodes, and target backplates. The storage cathode-ray tube has two targets for split-screen operation; therefore, two identical erase generators are provided, each consisting of an Erase Multivibrator and a Target Control Amplifier. These circuits produce an erase waveform that will erase written information. Additional circuitry includes: (1) the Enhance Generator, which permits very fast single sweeps to be stored; (2) the INTEGRATE switch, which permits storage of very fast repetitive signals; (3) the AUTO ERASE circuit, which stores the display at the end of each sweep and locks out all other sweeps for a time determined by the VIEW TIME control. Fig. 2-24 shows a detailed block diagram of the Storage Circuit.

Storage Tube Basic Operating Principles

The crt used in the 7313/R7313 is a direct-view storage cathode-ray tube with a split-screen viewing area that permits each half to be individually operated for stored displays. Storage, which is the retention on the crt screen of a displayed event, is based on a secondary-emission principle. A stream of primary electrons strikes an insulated target surface with sufficient energy to dislodge secondary electrons. A storage target is a surface having the ability to store information when bombarded by an electron beam. As the potential increases, each primary electron dislodges more than one secondary electron, resulting in the target material charging positive. The target approaches the backplate potential, yielding a higher energy flood electron and resulting in light output.

The storage cathode-ray tube contains special storage elements in addition to the conventional writing-gun elements. The operating mode of the tube depends primarily on the voltages applied to these storage electrodes. With one condition of applied potentials, the storage screen or target backplate operates in the ready-to-write state; then, when it is bombarded with high energy writing beam current, the bombarded portion shifts to the stored mode to store a written display. With a different set of applied voltages, the screen (target) operates in the conventional mode, similar to a conventional cathode-ray tube.

The storage screens contain a special coated surface that continues to emit light when bombarded by the flood-gun electrons, provided the surface has been written by the writing-gun beam and shifted to the stored state. The two targets are electrically isolated from each other, which allows simultaneous presentations of stored information on one half and non-store (conventional) information on the other half of the viewing area.

Fig. 2-25 illustrates the basic construction of the storage tube. The flood guns are low-energy electron guns that direct a large area flow, or cones, of electrons toward the entire screen. The collimation electrodes shape the flood spray for uniform coverage of the storage targets. The operating level of the tube is the potential difference between the target backplates and the flood-gun cathodes. The collimation electrodes have no effect on the bombarding energy of the flood-gun electrons.

In the store mode, ready-to-write state, the insulator surface of the target tends to charge down to a potential lower than the backplate potential, and toward the potential of the flood-gun cathode. This is due to flood-gun current from the insulator surface. The potential to which the target charges is called its rest potential. This potential is such that the flood-gun electron landing energy is not enough to illuminate the phosphor in the target. The target is now ready to write. See Fig. 2-26.

In the writing process, the target is scanned by the writing-gun electrons. These high-energy electrons increase the target secondary emission over the area they scan, so that the ratio of secondary current to primary current becomes greater than one. (This is shown in Fig. 2-26 as the

http://manoman.sqhill.com

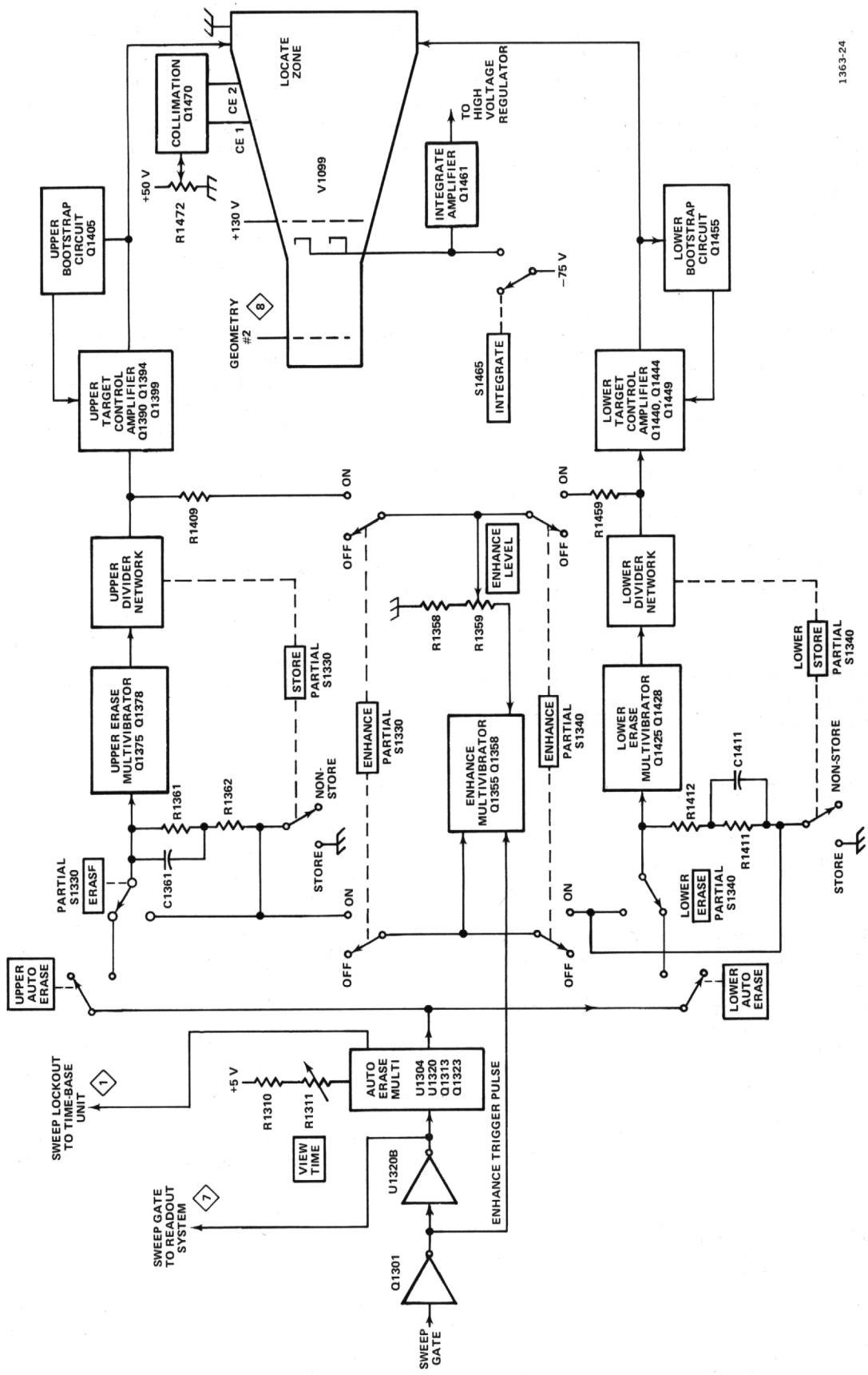

Fig. 2-24. Storage circuit detailed block diagram.

http://manoman.sqhill.com

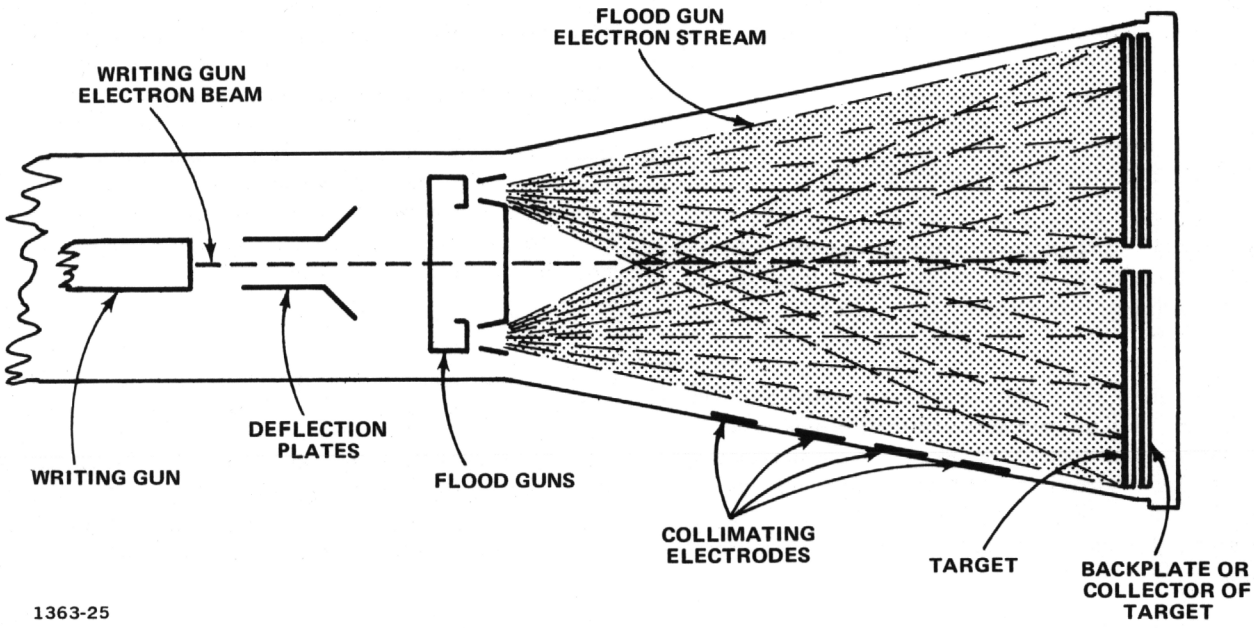

Fig. 2-25. Pictorial diagram of storage cathode-ray tube.

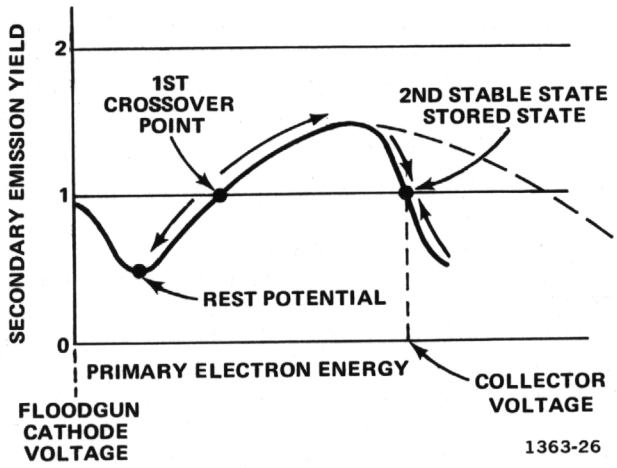

Fig. 2-26. Secondary emission curve.

first crossover point.) When the ratio exceeds one, that part of the bombarded surface shifts to a new stable state. Writing has been accomplished and this segment of the target is now stored.

In the written state, the potential difference between the flood-gun cathode and target becomes greater and the flood-gun electrons now have a landing energy that is sufficient to provide a visual display. This visual display will continue as long as the flood-gun beam covers the target.

At high sweep rates, the writing beam current is not adequate to bring the portion of the target scanned above the crossover point. Therefore, the flood-gun electrons, when landing on the bombarded area, will remove the charge developed by the writing-gun electrons and the target will discharge to its initial ready-to-write state without being written. Thus, complete writing is a function of writing-beam current density.

When the stored display is no longer desired, the information is erased by a waveform as illustrated in Fig. 2-27. A positive-going pulse is first applied, to raise the backplate voltage above the writing threshold and write the entire target area with flood-gun electrons. Next, the

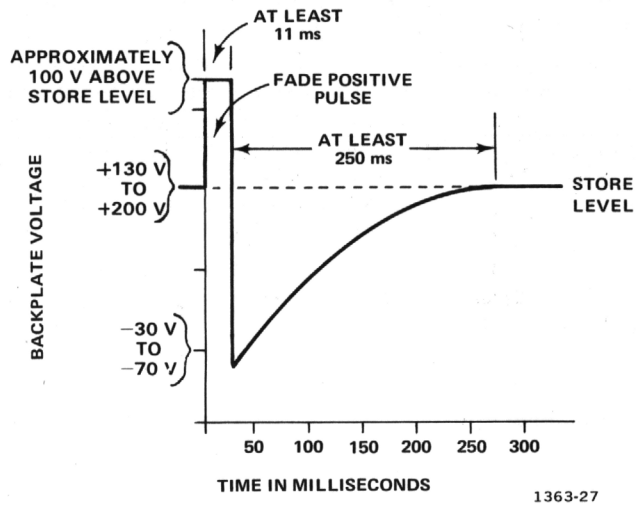

Fig. 2-27. Typical erase cycle waveform.

http://manoman.sqhill.com

backplate voltage is pulled well below the rest potential. Then, as the backplate voltage is gradually returned, the target is changed to the rest potential and the target is in the ready-to-write state.

Flood Guns and Collimation Electrodes

Two low-energy electron guns, or flood guns, are used in the 7313/R7313. The cathodes are returned to −75 volts through INTEGRATE switch S1465. The level of the flood-gun control grid is approximately +130 volts.

The collimation electrodes serve as an electrostatic lens to distribute the flood-gun electrons uniformly over the storage target, and they have no effect on the landing energy of the electrons. R1472 determines the voltage levels of CE1 and CE2 through emitter follower Q1470. R1485 is an additional crt geometry adjustment (located on CRT Circuit diagram).

Target Control Amplifiers

The Target Control Amplifiers are incorporated to maintain a high degree of control of the upper and lower storage backplate voltages. These are emitter-follower feedback amplifiers consisting of Q1390, Q1394, and Q1399 for the upper target backplate and Q1440, Q1444, and Q1449 for the lower target backplate. A bootstrapping circuit (Q1405, Upper; Q1455, Lower) is provided for each Target Control Amplifier to maintain transistor operating voltage during the positive-going portion of the erase waveform (fade positive). The bootstrapping circuits will be described in full detail in the Erase Generator discussion.

A separate STORE switch is provided for each Target Control Amplifier, partial S1330 (UPPER) and partial S1340 (LOWER) allowing the target backplates to be operated individually. In the STORE mode, that is, when the STORE buttons are pushed in and the crt is shifted to the ready-to-write state, the backplate voltages are adjusted individually by the UPPER and LOWER Store Level controls, R1387 and R1437 respectively. These adjustments set the value of current to the feedback amplifier null points (Q1390 and Q1440 emitters). In the non-store, or conventional mode, the backplate voltages are established by adjustment of the Non-Store Level adjustments R1386 and R1436.

Erase Generator

NOTE

The following description applies to both erase generators; however, the circuit numbers used are those of the upper circuit.

In order to erase the stored display, a fade-positive pulse (see Fig. 2-27) is first applied to the storage-target backplate. This increases the potential difference between the flood-gun cathodes and target backplate, raising the operating level above the upper writing limit and writing the entire target area with flood-gun electrons. Next, the backplate voltage is pulled negative, well below the retention threshold. Then, as the backplate is gradually returned, the target is charged to the rest potential and returned to the ready-to-write state. The following paragraphs describe how the erase waveform is generated.

The Erase Multivibrator is composed of Q1375, Q1378 and their associated circuitry. This is a monostable multivibrator with Q1375 quiescently saturated and Q1378 biased off. The collector of Q1378 is clamped slightly above ground by the conduction of CR1379. C1377 is charged to the voltage difference between the junction of R1370-R1371 and the collector level of Q1378.

When the ERASE pushbutton (partial S1330) is pressed, a negative step to ground is coupled to the base of Q1375 through R1364, C1367, and R1368. Q1375 turns off and Q1378 turns on. The collector of Q1378 approaches −15 volts as the transistor saturates and conducts current through R1384 and R1407. The output of the Target Control Amplifier steps positive pulling the storage target backplate with it. This increases the operating level of the crt and the entire target area is written.

When Q1378 turns on, the negative-going step produced at its collector is also coupled through C1377, which turns CR1371 off, ensuring cutoff of Q1375. C1377 begins to discharge through R1370, and after an RC-controlled period of time, the current through R1370 has diminished sufficiently to allow the voltage at the anode of CR1371 to rise above the turn-on level. The base of Q1375 is also raised to the turn-on level, and the multivibrator is switched back to its quiescent state.

While Q1378 is conducting, the charge on C1379 is removed. When Q1378 turns off, its collector rises rapidly and is clamped slightly above ground by CR1379. This produces a positive-going step which is coupled through C1379, reverse biasing CR1381. This positive movement is applied to the input of the Target Control Amplifier, causing the output to step sharply negative well below the rest potential. As C1379 charges, the voltage at the junction of R1381-R1382 decays at an RC-controlled rate until CR1381 turns on and clamps it at about −15.5 volts. This negative-going sawtooth voltage is applied to the Target Control Amplifier, which produces a positive-going sawtooth at its output to raise the backplate to the ready-to-write state.

http://manoman.sqhill.com

When the crt is shifted from the conventional mode to the storage mode, the erase multivibrator initiates an erase waveform to prepare the crt target for storage. Bootstrapping maintains operating voltage for Q1394 and Q1399 during the fade-positive portion of the erase waveform when the emitter of Q1399 is pulled positive. The voltage drop across zener diode VR1400 sets the base of Q1405 approximately 120 volts below the emitter of Q1399. This voltage drop is kept constant under dynamic conditions by the essentially constant current established through R1401, which is clamped by the Q1405 forward bias voltage. When the emitter of Q1399 is suddenly stepped positive by the erase waveform, the base of Q1405 is stepped positive by the same amplitude. Q1405 emitter follows the base, and the positive-going step is coupled through C1406 to raise the collector of Q1399 positive by essentially the same amplitude as that at its emitter, thus maintaining a fairly constant collector-to-emitter voltage. This action reverse biases CR1399, temporarily disconnecting the +250-Volt Supply. When the fade positive pulse is terminated and the emitter of Q1399 is pulled negative, CR1400 turns off, disconnecting the bootstrap circuit and allowing the collector of Q1399 to return to its +250-volt level.

Auto Erase Generator

The Auto Erase circuits allow one sweep to be stored and locks out all other sweeps for a time determined by the VIEW TIME control. At the end of View Time, the stored display is erased and the sweep is enabled for another Auto Erase cycle.

The Auto Erase circuit consists of two series-coupled monostable multivibrators and an Auto Erase Enable Logic circuit. The View Time Multivibrator (U1304B, Q1313, U1320C) determines the amount of time that the stored trace is viewed before it is erased. The Erase Cycle Multivibrator (U1304A, Q1323, U1320D) locks out all sweeps until completion of the erase cycle. The Auto Erase Logic circuit (U1320A) prevents operation of the Auto Erase circuits unless both the STORE and AUTO ERASE functions are selected.

The View Time Multivibrator is driven by the sweep gate signal from the time-base unit. The sweep gate is inverted by Q1301 to supply a trigger signal to the Enhance Multivibrator. The output of Q1301 is inverted by U1320B and coupled to the Readout System and the View Time Multivibrator.

During the sweep, pin 5 of flip-flop U1304B is quiescently HI and pin 9 is quiescently LO. C1314 is held discharged. At the end of sweep, the sweep gate switches LO at pin 5 causing pin 9 to switch HI. CR1314 is reverse biased, which allows C1314 to charge towards +5 volts at a rate determined by C1314 and the VIEW TIME control R1311. The high level on pin 9 is also coupled through CR1306 for Sweep LOCKOUT in the time-base unit. When C1314 charges to the level at the gate of Q1313, the unijunction transistor fires. As a result, pin 9 of U1320C switches HI and pin 10 switches LO. The LO is seen at pin 6 of U1304B which clears the flip-flop.

Simultaneously, the LO at pin 10 of U1320C is coupled to the Erase Cycle Multivibrator (U1304A, Q1323, U1320D). Quiescently, during view time, pin 1 of U1304A is HI, pin 12 is LO, and pin 13 is HI. The LO level coupled to pin 1 of U1304A switches pin 12 HI and pin 13 LO. The LO level at pin 13 is coupled through the Auto Erase contact of S1330 and S1340 (if AUTO ERASE is selected) to initiate the erase cycle. The HI level at pin 12 forward biases CR1308 and maintains Sweep LOCKOUT in the time-base unit. Simultaneously, CR1306 is reversed biased and C1322 charges towards +5 volts, through R1323, until it reaches the level at the gate of Q1323. Q1323 fires and switches pin 12 of U1304A HI and pin 13 LO. This clears U1304A, causing pin 12 to switch LO, and thereby removing Sweep LOCKOUT from the time-base unit.

Enhance Generator

Writing speed is primarily a function of the writing-gun beam-current density and physical properties of the storage tube. At very fast sweep speeds, the writing beam does not charge the scanned portion of the target sufficiently to shift it to the stored state, and the flood-gun electrons discharge the small deposited charge back down to the rest potential before the next sweep.

Writing beyond the normal writing speed of the crt is attained through the process of enhancement or integration. First to be discussed will be enhancement.

The Enhance Generator produces an approximate two-millisecond negative-going pulse that is applied to the Target Control Amplifier summing point, resulting in a positive-going pulse to the target backplate. This conditions the target so that less writing-gun current is required to shift the scanned section to the stored state.

Q1355, Q1358, and their associated circuitry form a monostable multivibrator. Operation of this circuit is similar to that described for the Erase Multivibrator. When either ENHANCE switch (S1330 or S1340) is pushed in, Q1355 has a conduction path to ground through R1356. Q1355 saturates and the low-voltage level at the collector of Q1355 keeps Q1358 turned off. The negative-going portion of the Enhance Trigger pulse from the Sweep circuit is coupled through C1351 to switch the Enhance Multivibrator. Q1355 turns off and Q1358 turns on. The collector of Q1358 falls to about −15 volts producing a

http://manoman.sqhill.com

negative-going step that is coupled through C1357, and turns off CR1354. The length of time that the multivibrator remains in this state, and thus the pulse width, is determined by the values of R1353 and C1357. The setting of the ENHANCE Level control, R1359, determines the amplitude of the pulse that is applied to the feedback-amplifier summing point.

The second fast-writing technique to be discussed is integration. In this mode of operation, the flood-gun beam is interrupted momentarily, allowing the writing-gun beam to sum small amounts of charge for successive sweep so that when the flood electrons are again turned on, the scanned target area shifts to the stored state. INTEGRATE switch S1465 disconnects the flood-gun cathodes and connects −75 volts to the error-signal input terminal of the High-Voltage Regulator circuit through R1286. This shifts the high voltage slightly, correcting for the deflection sensitivity changes that occur when the flood guns are turned off. Releasing the INTEGRATE switch allows the display to shift to the stored state.

READOUT SYSTEM ⟨11⟩

The Readout System provides alpha-numeric display of information encoded by the plug-in units. This display is presented on the crt and is written by the crt beam on a time-shared basis with the analog waveform display. Figure 2-31 shows a detailed block diagram of the Readout System. A schematic of this circuit is shown on diagram 11 at the rear of this manual.

The definition of several terms follows:

Character—A character is a single number, letter, or symbol displayed on the crt, either alone or in combination with other characters.

Word—A word is made up of a related group of characters. In the 7313/R7313 Readout System, a word can consist of up to ten characters.

Frame—A frame is a display of all words for a given operating mode and plug-in combination. Up to six ten-character words can be displayed in one frame. Figure 2-28 shows the position of each word in a complete frame.

Column—One of the vertical lines in the Character Selection Matrix (see Fig. 2-29). Columns C-0 (column zero) to C-10 (column 10) can be addressed in the 7313/R7313 system.

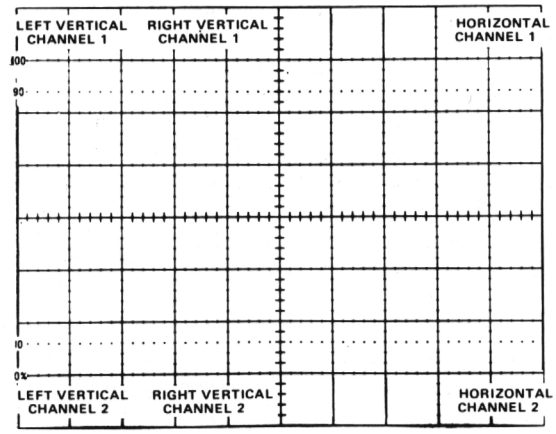

Fig. 2-28. Location of Readout words on the cathode-ray tube identifying the originating plug-in and channel (one complete frame shown, simulated readout).

Row—One of the horizontal lines in the Character Selection Matrix. Rows R-1 (row 1) through R-10 (row 10) and R-14 (row 14) can be addressed in the 7313/R7313 system.

Time-Slot—A location in a pulse train. In the 7313/R7313 Readout System, the pulse train consists of 10 negative-going pulses. Each time-slot pulse is assigned a number between one and ten. For example, the first time-slot is TS-1.

Time-multiplexing—Transmission of data from two or more sources over a common path by using different time intervals for different signals.

Display Format. Up to six words of readout information can be displayed on the crt. The position of each word is fixed and is directly related to the plug-in unit from which it originated. Figure 2-28 shows the area of the graticule where the readout from each plug-in unit is displayed. Notice that Channel 1 of each plug-in unit is displayed within the top division of the crt and Channel 2 is displayed directly below within the bottom division. Figure 2-30 shows a typical display, where only Channel 2 of the Right Vertical unit and Channel 2 of the Horizontal unit are displayed.

Each word in the readout display can contain up to 10 characters; although the typical display will contain between two and seven characters per word. The characters are selected from the Character Selection Matrix shown in Fig. 2-29. In addition, 12 operational addresses are provided for special instructions to the Readout System. The unused locations in the Matrix (shaded area) are available

http://manoman.sqhill.com

http://manoman.sphill.com

ROW NUMBER / COLUMN NUMBER →	CURRENT (MILLI-AMPERES)	C-0	C-1	C-2	C-3	C-4	C-5	C-6	C-7	C-8	C-9	C-10
		0	0.1	0.2	0.3	0.4	0.5	0.6	0.7	0.8	0.9	⩾ 1.0
R-1	0	SKIP[1]	0	1	2	3	4	5	6	7	8	9
R-2	0.1		↯	<	I	/	+	−	+	C	Δ	>
R-3	0.2		ADD[1] ONE ZERO	ADD[1] TWO ZEROS	SHIFT[1] PREFIX ←	SHIFT[1] PREFIX ← AND ADD ONE ZERO						IDENTIFY[1]
R-4	0.3		m	μ	n	p	X	K	M	G	T	R
R-5	0.4		S	V	A	W	H	d	B	c	Ω	E
R-6	0.5		U	N	L	Z	Y	P	F	J	Q	D
R-7	0.6				DECIMAL[1] POINT LOCATION NO. 3	DECIMAL[1] POINT LOCATION NO. 4	DECIMAL[1] POINT LOCATION NO. 5	DECIMAL[1] POINT LOCATION NO. 6	DECIMAL[1] POINT LOCATION NO. 7			
R-8	0.7											
R-9	0.8											
R-10	0.9	ADD SPACE IN DISPLAY[1]										

UNUSED LOCATIONS. AVAILABLE FOR FUTURE EXPANSION OF READOUT SYSTEM.

[1] OPERATIONAL ADDRESS.

Fig. 2-29. Character selection matrix for Readout system.

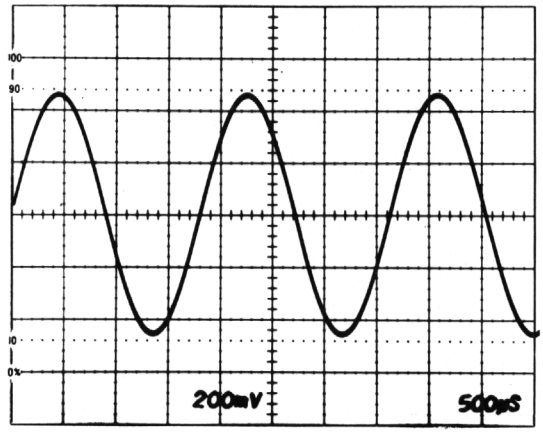

Fig. 2-30. Typical Readout display where only Channel 2 of the Right Vertical unit and Channel 2 of the Horizontal unit are displayed.

for future expansion of the Readout System. The method of addressing the locations in the Character Selection Matrix is described in the following discussion.

Developing the Display. The following basic description of the Readout System uses the block diagram shown in Fig. 2-31. This description is intended to relate the basic function of each stage to the operation of the overall Readout System. Detailed information on circuit operation is given later.

The key block in the Readout System is the Timer stage. This stage produces the basic signals that establish the timing sequences within the Readout System. Period of the timing signal is about 250 microseconds (drops to about 210 microseconds when Display-Skip is received; see detailed description of Timing stage for further information). This stage also produces control signals for other stages within this circuit and interrupts signals to the Vertical Amplifier, Horizontal Amplifier, and Logic circuits, which allow a readout display to be presented. The Time-Slot Counter stage receives a trapezoidal voltage signal from the Timer stage and directs it to one of ten output lines. These output lines are labeled TS-1 through TS-10 (time-slots one through ten) and are connected to the vertical and horizontal plug-in compartments as well as to various stages within the Readout System. The output lines are energized sequentially, so there is a pulse on only one of the 10 lines during any 250-microsecond timing period. After the Time-Slot Counter stage has counted time-slot 10, it produces an End-of-Word pulse which advances the system to the next channel.

Two output lines, row and column, are connected from each channel of the plug-in unit back to the Readout System. Data is typically encoded on these output lines by connecting resistors between them and the time-slot input lines. The resultant output is a sequence of ten analog current levels that range from zero to one milliampere (100 microamperes/step) on the row and column output lines. This row and column corresponds to the row and column of the Character Selection Matrix in Fig. 2-29. The standard format for encoding information onto the output lines is given in Table 2-2. (Special-purpose plug-in units may have their own format for readout; these special formats will be defined in the manuals for these units.)

TABLE 2-2

Standard Readout Format

Time-Slot Number	Description
TS-1	Determines decimal magnitude (number of zeros displayed or prefix change information) or the IDENTIFY function (no display during this time-slot).
TS-2	Indicates normal or inverted input (no display for normal).
TS-3	Indicates calibrated or uncalibrated condition of plug-in variable control (no display for calibrated condition).
TS-4	Scaling (1, 2, 5).
TS-5 TS-6 TS-7	Not encoded by plug-in unit. Left blank to allow addition of zeros by Readout System.
TS-8	Defines the prefix which modifies the units of measurement.
TS-9 TS-10	Define the units of measurement of the plug-in unit. May be standard units of measurement (V, A, S, etc.,) or special units selected from the Character Selection Matrix.

The encoded column and row data from the plug-in units is selected by the Column Data Switch and Row Data Switch stages respectively. These stages take the analog currents from the eight data lines (two channels from each of the four plug-in compartments) and produce a time-multiplexed analog voltage output containing all of the column or row information from the plug-in units. The Column Data Switch and Row Data Switch are sequenced by the binary Channel Address Code from the Channel Counter.

The time-multiplexed output of the Column Data Switch is monitored by the Display-Skip Generator to determine if it represents valid information that should be

http://manoman.sqhill.com

displayed. Whenever information is not encoded in a time-slot, the Display-Skip Generator produces an output level to prevent the Timer stage from producing the control signals that normally interrupt the crt display and present a character.

The analog outputs of the Column Data Switch and Row Data Switch are connected to the Column Decoder and Row Decoder stages respectively. These stages sense the magnitude of the analog voltage input and produce an output current on one of ten lines. The outputs of the Column Decoder stage are identified as C-1 through C-10 (column 1 through 10) corresponding to the encoded column information. Likewise, the outputs of the Row Decoder stage are identified as R-1 through R-10 (row 1 through 10) corresponding to the encoded row information. The primary function of the row and column outputs is to select a character from the Character Selection Matrix to be produced by the Character Generator stage. These outputs are also used at other points within the system to indicate when certain information has been encoded. One such stage is the Zeros Logic and Memory. During time-slot 1 (TS-1), this stage checks if zero-adding or prefix-shifting information has been encoded by the plug-in unit, and stores it in memory until time-slots 5, 6, or 8. After storing this information, it triggers the Display-Skip Generator stage so that there is no display during time-slot 1 (as defined by Standard Readout Format; see Table 2-2). When time-slots 5, 6, and 8 occur, the memory is addressed and any information stored there during time-slot 1 is transferred to the input of the Column Decoder stage to modify the analog data during the applicable time-slot.

Also, the Zeros Logic and Memory stage produces the IDENTIFY function. When time-slot 1 is encoded for IDENTIFY (column 10, row 3), this stage produces an output level, which connects the Column Data Switch and Row Data Switch to a coding network within the Readout System. Then, during time-slots 2 through 9, an analog current output is produced from the Column Data Switch and Row Data Switch, which addresses the correct points in the Character Selection Matrix to display the word "IDENTIFY" on the crt. The Zeros Logic and Memory stage is reset after each word by the Word Trigger pulse.

The Character Generator stages produce the characters that are displayed on the crt. Any of the 50 characters shown on the Character Selection Matrix of Fig. 2-29 can be addressed by proper selection of the column and row currents. Only one character is addressable in any one time-slot; a space can be added into the displayed word by the Decimal Point Logic and Character Position Counter stage when encoded by the plug-in. The latter stage counts the number of characters generated and produces an output current to step the display one character position to the right for each character. In addition, the character position is advanced once during each of time-slots 1, 2, and 3, whether a character is generated during these time-slots or not. This action fixes the starting point of the standard-format display such that the first digit of the scaling factor always starts at the same point within each word regardless of the information encoded in time-slot 1, 2, or 3 preceding this digit. Also, by encoding row 10 and column 0 during any time-slot, a blank space can be added to the display. Decimal points can be added to the display at any time by addressing the appropriate row and column. (See Character Selection Matrix for location of these decimal points.) The Decimal Point Logic and Character Position Counter stage is reset after each word by the Word Trigger pulse.

The Format Generator stage provides the output signals to the vertical and horizontal deflection systems of the instrument to produce the character display. The binary Channel Address Code from the Channel Counter stage is connected to this stage, so that the display from each channel is positioned to the area of the crt associated with the plug-in and channel originating the word (see Fig. 2-28). The positioning current or decimal point location current generated by the Decimal Point Logic and Character Position Counter stage is added to the Horizontal (X) signal at the input to the Format Generator stage to provide horizontal positioning of the characters within each word. The X and Y Readout signals are connected to the Horizontal Amplifier and Vertical Amplifier through the X and Y Output stages.

The Word Trigger stage produces a trigger from the End-of-Word pulse generated by the Time-Slot Counter stage after the tenth time-slot. This Word Trigger pulse advances the Channel Counter to display the information from the next channel or plug-in unit. It also provides a reset pulse to the Zeros Logic and Memory stage and the Decimal Point Logic and Character Position Counter stage. The Word Trigger stage can also be advanced to jump a complete word or a portion of a word when a Jump command is received from the Row Data Switch stage.

The Single-Shot Lockout stage allows the display sequence of the Readout System to be changed. Normally, the Readout System operates in a free-running mode, so the waveform display is interrupted randomly to display characters. However, under certain conditions (such as single-shot photography), it is desirable that the Readout System operate in a triggered mode where the readout portion of the display is normally blanked out, but can be presented on command. The Readout Mode switch, S2110, determines the operating mode of the Readout System.

Circuit Analysis of Readout System

The following analysis of the Readout System discusses the operation of each stage in detail. A complete schematic of the Readout System is shown on diagram 11 at the rear of this manual.

http://manoman.sqhill.com

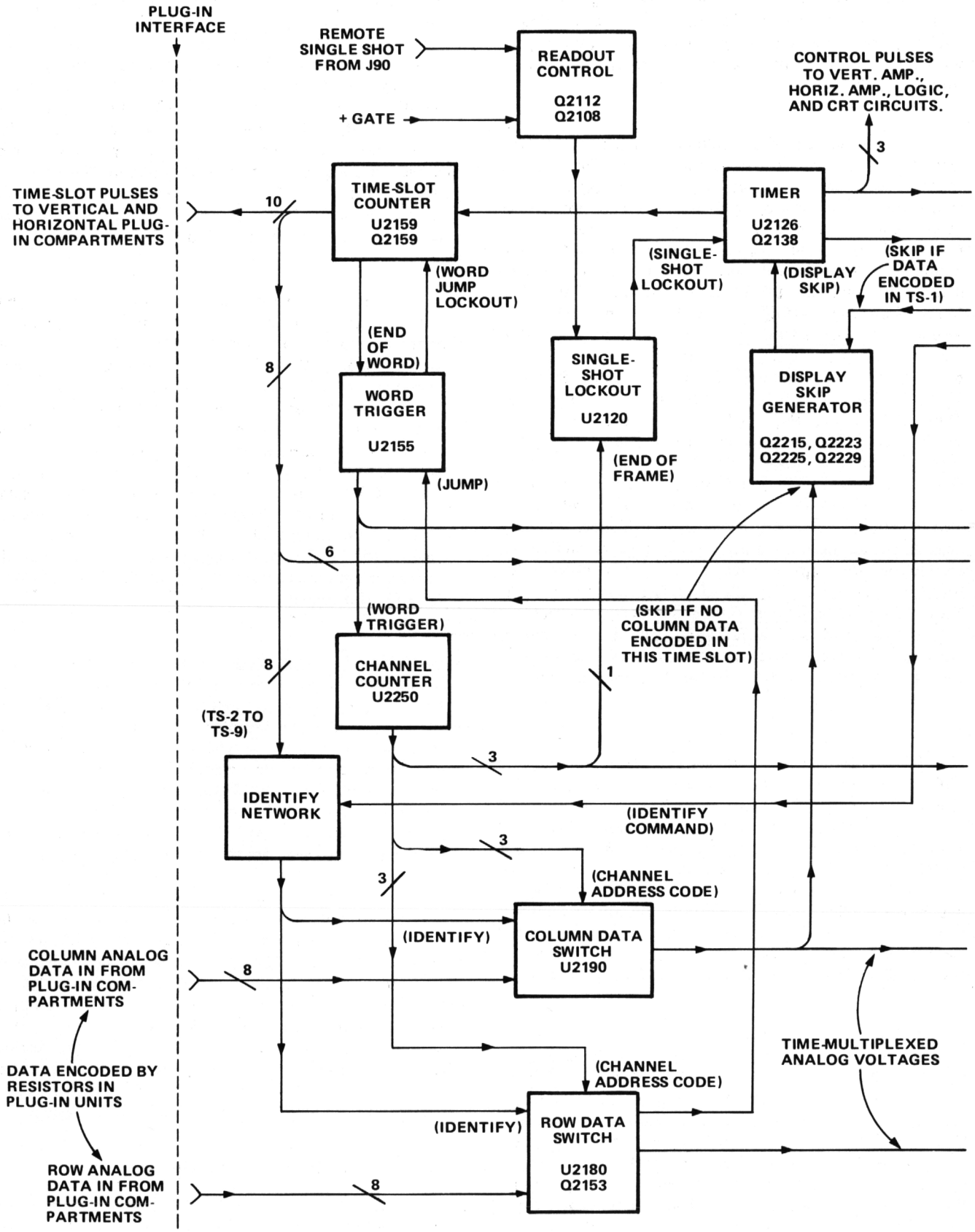

Fig. 2-31. Detailed block diagram of the Readout System.

http://manoman.sqhill.com

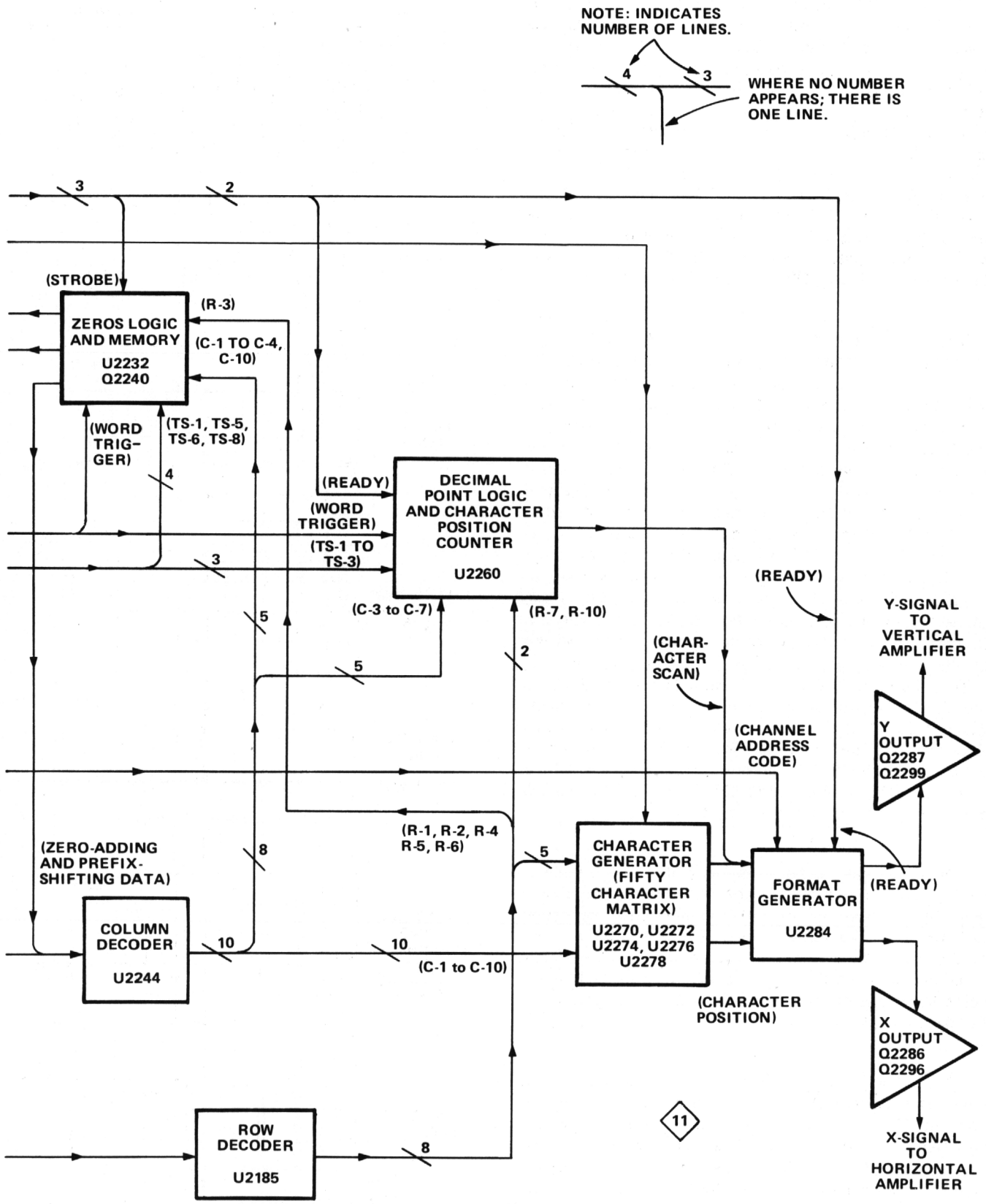

Fig. 2-31 (cont).

http://manoman.sqhill.com

Timer. U2126 establishes the timing sequence for all circuits within the Readout System. This stage produces seven time-related output waveforms (see Fig. 2-32). The triangle waveform produced at pin 6 forms the basis for the remaining signals. The basic period of this triangle waveform is about 250 microseconds, as controlled by RC network R2135-C2135. The triangle waveform is clipped and amplified by U2126 to form the trapezoidal output signal at pin 10. The amplitude of this output signal is exactly 15 volts as determined by U2126 (exact amplitude necessary to accurately encode data in plug-in units; see Encoding the Data). The Trigger output at pin 5 provides the switching signal for the Time-Slot Counter and Word Trigger stages (U2159, Q2159, U2155).

The signals at pins 12, 13, 14, and 16 of U2126 are produced only when the triangle waveform is on its negative slope and the trapezoidal waveform has reached the lower level. The timing sequence of these waveforms is important to the operation of the Readout System (see expanded waveforms in Fig. 2-33). The Z-Axis Logic OFF at pin 14 is produced first. This negative-going signal provides a blanking pulse to the Z-Axis Logic stage (see diagram 2) to blank the crt before the display is switched to the Readout System. It also produces the Strobe pulse through Q2138 and CR2142 to signal other stages within the Readout System to begin the sequence necessary to produce a character. The collector level of Q2138 is also connected to Character Generator No. 2, U2272, through CR2140. This activates U2272 during the quiescent period of the Strobe pulse (collector of Q2138 negative) and diverts the output current of Row Decoder U2185 to row 2. The purpose of this configuration is to prevent the Zeros Logic and Memory Stage U2232 from storing incorrect data during the quiescent period of the Strobe pulse. When the Strobe pulse goes positive, CR2140 is reverse-biased to disconnect Q2138 from U2272 and allow the Row Decoder to operate in the normal manner.

The next signal to be produced is the X/Y Disable at pin 13. This positive-going signal disconnects the plug-in unit signals from the vertical and horizontal deflection systems so that the plug-in units do not control the position of the crt beam during the readout display. The Ready signal derived from this output is connected to the Decimal Point Logic and Character Position Counter stage and the Format Generator stage.

The Z Readout output at pin 12 of U2126 is produced next. This current is connected to the CRT Circuit to unblank the crt to the intensity level determined by the READOUT intensity control. The Character Scan ramp at pin 16 starts to go negative as this timing sequence begins. However, character generation does not start until the readout intensity level has been established. The triangular Character Scan ramp runs from about −2 volts to about −8.5 volts, then returns back to the original level. This waveform provides the scanning signal for the Character

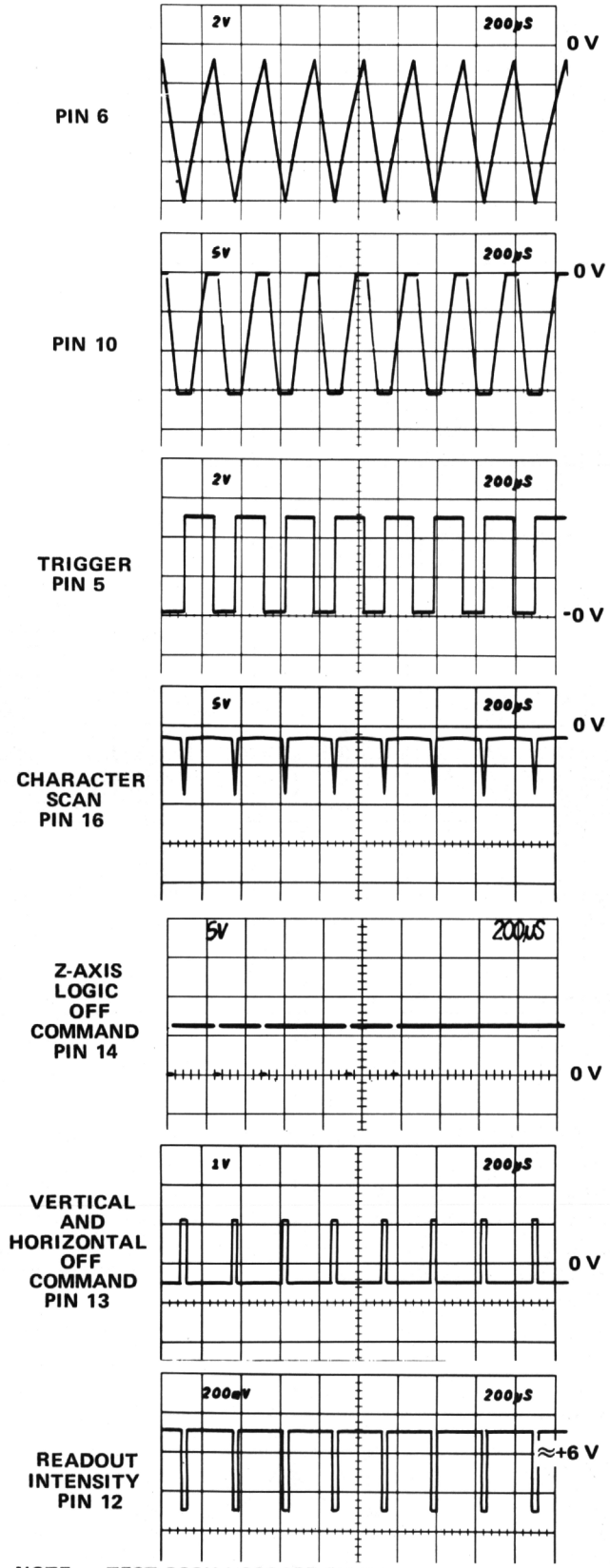

Fig. 2-32. Output waveforms of Timer stage (U2126).

http://manoman.sqhill.com

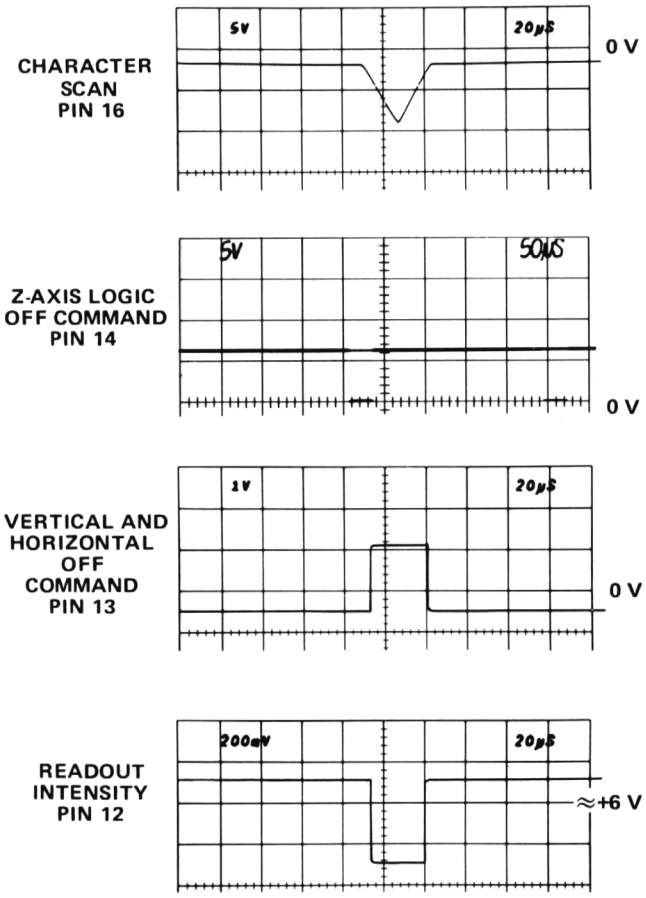

Fig. 2-33. Detail of output at pins 12, 13, 14, and 16 of Timer stage (U2126).

Generator stages. Character Scan adjustment R2128 sets the dc level of the Character Scan ramp for complete characters on the display.

The Timer stage operates in one of two modes as controlled by the Display-Skip level at pin 4 of U2126. The basic mode just described is a condition that does not occur unless all ten characters of each word (60 characters total) are displayed on the crt. Under typical conditions only a few characters are displayed in each word. The Display-Skip level at pin 4 determines the period of the Timer output signal. When a character is to be generated, pin 4 is LO and the circuit operates as just described. However, when a character is not to be displayed, a HI level is applied to pin 4 of U2126 through CR2125 from the Display-Skip Generator stage (Q2215, Q2223, Q2225, Q2229). This signal causes the Timer to shorten its period of operation to about 210 microseconds. The waveforms in Fig. 2-34 show the operation of the Timer stage when the Display-Skip condition occurs for all positions in a word. Notice that there is no output at pins 12, 13, 14, and 16 under this condition. This means that the crt display is not interrupted to display characters. Also notice that the triangle waveform at pin 6 does not go as far negative, and that the negative portion of the trapezoidal waveform at pin 10 is shorter. Complete details on operation of the Display-Skip Generator are given later.

The Timer operation is also controlled by the Single-Shot Lockout level at pin 2 of U2126. If this level is LO, the Timer operates as just described. However, if the Single-Shot Lockout stage sets a HI level at this pin, the Timer stage is locked out and can not produce any output signals (see Single-Shot Lockout description for further information).

READOUT intensity control R102B (see diagram 7) sets the intensity of the readout display independently of the INTENSITY control. The READOUT intensity control also provides a means of turning the Readout System off when a readout display is not desired. When R102B is turned fully counterclockwise, switch S102 opens. The current to pin 11 of U2126 is interrupted, and at the same time, a positive voltage is applied to pin 4 through CR2124. The positive voltage switches the stage to the same conditions as were present under the Display-Skip condition. Therefore, the crt display is not interrupted to present characters. However, time-slot pulses continue to be generated.

Time-Slot Counter. U2159 is a sequential switch that directs the trapezoidal waveform input at pin 8 to one of its 10 output lines. These time-slot pulses are used to interrogate the plug-in units to obtain data for the Readout System. The Trigger pulse at pin 15 switches the Time-Slot Counter to the next output line; the output signal is sequenced consecutively from time-slot 1 through time-slot 10. Figure 2-35 shows the time relationship of the time-slot pulses. Notice that only one line carries a time-slot pulse at any given time. When time-slot 10 is completed, a negative-going End-of-Word pulse is produced at pin 2. The End-of-Word pulse provides a drive pulse for the Word Trigger stage U2155 and also provides an enabling level to the Display-Skip Generator (Q2215, Q2223, Q2225, Q2229) during time-slot 1 only.

Pin 16 of U2159 is a reset input for the Time-Slot Counter (U2159, Q2159). When this pin is held LO, the Time-Slot Counter resets to time-slot 1. The Time-Slot Counter can be reset in this manner only when a Jump Command is received by U2155C and D (see following discussion).

Word Trigger. This stage is made up of U2155A and B. Quiescently, pin 3 of U2155A is LO as established by the operating conditions of U2155C and D. Therefore, the LO End-of-Word pulse produced by the Time-Slot Counter (U2159, Q2159) results in a HI level at pin 1 of U2155A. This level is inverted by U2155B to provide a negative-going Word Trigger pulse to the Channel Counter (U2250).

http://manoman.sqhill.com

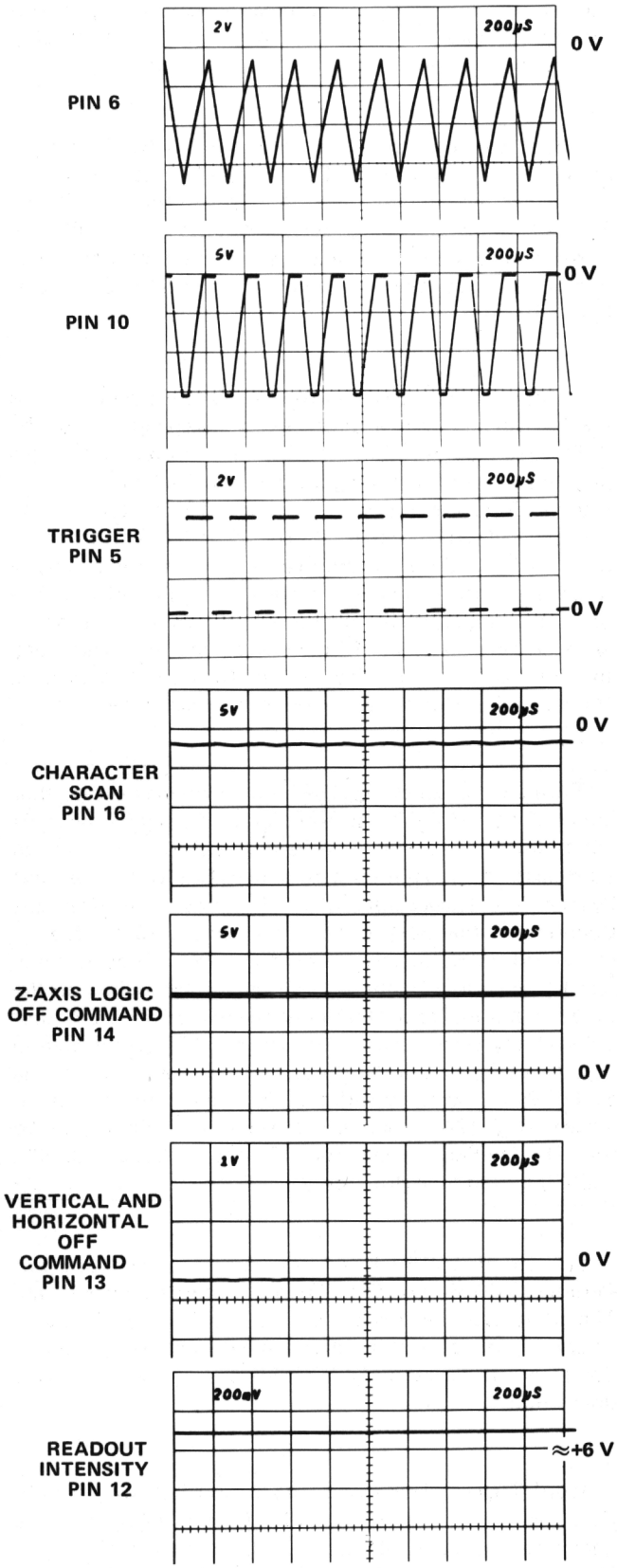

Fig. 2-34. Timer stage output when Display Skip condition occurs (U2126).

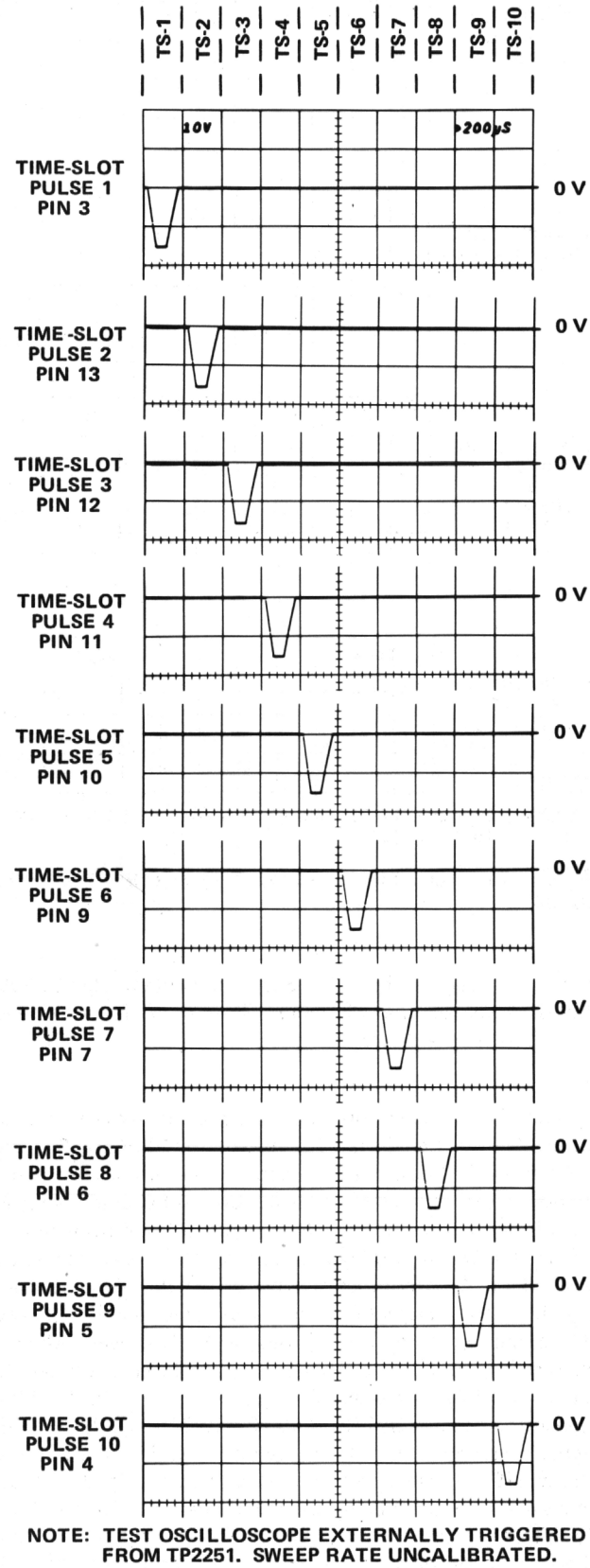

Fig. 2-35. Time relationship of time-slot (TS) pulses produced by U2159.

http://manoman.sqhill.com

Also, a Word Trigger pulse is produced by U2155B when a Jump Command is received at pin 8 of U2155C. This condition can occur during any time-slot (see Row Decoder for further information on origin of the Jump Command). U2155C and D are connected as a bistable flip-flop. The positive-going Jump Command at pin 8 of U2155C produces a LO at pin 10. This LO is inverted by U2155D to produce a HI at pin 13, which allows pin 9 to be pulled HI through CR2156. The flip-flop has now been set and remains in this condition until reset, even though the Jump Command at pin 8 returns to its LO level. The HI output level at pin 13 turns on Q2159 to pull pin 16 of the Time-Slot Counter (U2159) LO. This resets the Time-Slot Counter to time-slot 1 and holds it there until the Word Trigger is reset. At the same time, a HI level is applied to pin 4 of the Timer (U2126) through CR2157 and CR2125. This HI level causes the Timer to operate in the Display-Skip mode, so a character is not generated.

The next Trigger pulse is not recognized by the Time-Slot Counter, since U2159 is locked in time-slot 1 by U2155. However, this trigger pulse resets the Word Trigger stage (U2155) through C2155. Pin 13 of U2155D goes LO to enable the Time-Slot Counter and Timer stages for the next time-slot pulse. Simultaneously, when U2155D switches output states, the resulting negative-going edge is connected to pin 3 of U2155A. This results in a negative-going Word Trigger output at pin 4 to advance the Channel Counter (U2250) to the next word. When the next Trigger pulse is received at pin 15, the Time-Slot Counter returns to the normal sequence of operation and produces an output on the time-slot 1 line.

Channel Counter. U2250 is a binary counter which produces the Channel Address Code for the Column and Row Decoder stages and the Format Generator stage. This code instructs these stages to sequentially select and display the six channels of data from the plug-in units. Table 2-3 gives the six combinations of the Channel Address Code and the resultant channel selected with each combination.

Readout Control. Q2108 and Q2112, along with S2110, control the operating mode of the Readout System through the Single-Shot Lockout stage. When Readout Mode switch S2110 is in the Free-Run position, the Readout System runs continuously in a free-running manner. The emitter of Q2108 has no ground return in this position, so it can not conduct. The collector of Q2108 rises positive through R2108 to enable the Readout System.

In the Gate Trig'd position, the emitter of Q2108 is connected to ground through R2109 and S2110 to produce a LO lockout level to the Single-Shot Lockout stage. At the end of the selected gate, a negative level is applied to the base of emitter-follower Q2112. The negative level at the emitter of Q2112 is differentiated by C2112-R2112. The

TABLE 2-3

Channel Address Code (U2250)

Pin 11 U2250	Pin 8 U2250	Pin 9 U2250	Channel Displayed
LO	LO	LO	Channel 2 Left Vertical
LO	LO	HI	Channel 1 Left Vertical
LO	HI	LO	Channel 2 Right Vertical
LO	HI	HI	Channel 1 Right Vertical
HI	LO	LO	Channel 2 Horizontal
HI	LO	HI	Channel 1 Horizontal

resulting negative-going pulse reverse biases Q2108 to momentarily allow its collector to go HI. This enables the Single-Shot Lockout stage for a single-shot readout display. (For further information, see the following discussion.)

Single-Shot Lockout. U2120 makes up the Single-Shot Lockout stage. This stage allows a single readout frame (six complete words) to be displayed on the crt, after which the Readout System is locked out, so further readout displays are not presented until the circuit is reset. U2120B and U2120C are connected to form a bistable flip-flop. For normal operation, pin 8 of U2120C is pulled HI through R2108. This activates U2120C to result in a LO output level at pin 10, enabling the Timer stage (U2126) to operate in the free-running manner described previously.

The output of the Single-Shot Lockout stage remains LO to allow U2126 to operate in the free-running mode until a LO is received at pin 8 of U2120C. When this occurs, the output level at pin 10 of U2120C does not change immediately. However, the Readout System is now enabled as far as the single-shot lockout function is concerned. If the Channel Counter has not completed word eight (Channel 1 of Horizontal unit), the Readout System continues to operate in the normal manner. However, when word eight is completed, the negative-going End-of-Frame pulse is produced at pin 11 of U2250 as the Channel Counter shifts to the code necessary to display word one. This pulse is coupled to pin 6 of U2120B. The momentary HI at pin 6 activates U2120B and its output goes LO to disable U2120C (pin 8 already LO). The output of U2120C goes HI to disable the Timer (U2126), so it operates in the Display-Skip mode. The HI at pin 10 of U2120C also holds U2120B enabled, so it maintains control of the flip-flop.

http://manoman.sghill.com

The Single-Shot Lockout stage remains in this condition until a positive-going trigger pulse is applied to pin 8 of U2120C. This trigger pulse produces a LO at pin 10 of U2120C to enable U2126 and disable U2120B. Now, the Timer can operate in the normal manner for another complete frame. When word eight is completed, the Channel Counter (U2250) produces another End-of-Frame pulse to again lock out the Timer stage. (For further information on the Readout Mode, see the Readout Control description.)

Encoding the Data. Data is conveyed from the plug-in units to the Readout System in the form of an analog (current level) code. The characters that can be selected by the encoded data are shown on the Character Selection Matrix (see Fig. 2-29). Each character requires two currents to define it; these currents are identified as the column current and the row current, corresponding to the column and row of the matrix. The column and row data is encoded by programming the plug-in units. Figure 2-36 shows a typical encoding scheme using resistors for a voltage-sensing amplifier plug-in unit. Notice that the 10 time-slot (TS) pulses produced by the Time-Slot Counter stage (U2159, Q2159) are connected to the plug-in unit. However, time-slots 5, 6, 7, and 10 are not used by the plug-in unit to encode data when using the Standard Readout Format. (See Table 2-2 for Standard Readout Format.) The amplitude of the time-slot pulses is exactly −15 volts as determined by the Timer stage. Therefore, the resultant output current from the plug-in units can be accurately controlled by the programming resistors in the plug-in units.

For example, in Fig. 2-36 resistors R10 through R90 control the row analog data, which is connected back to the Readout System. Figure 2-37A shows an idealized output

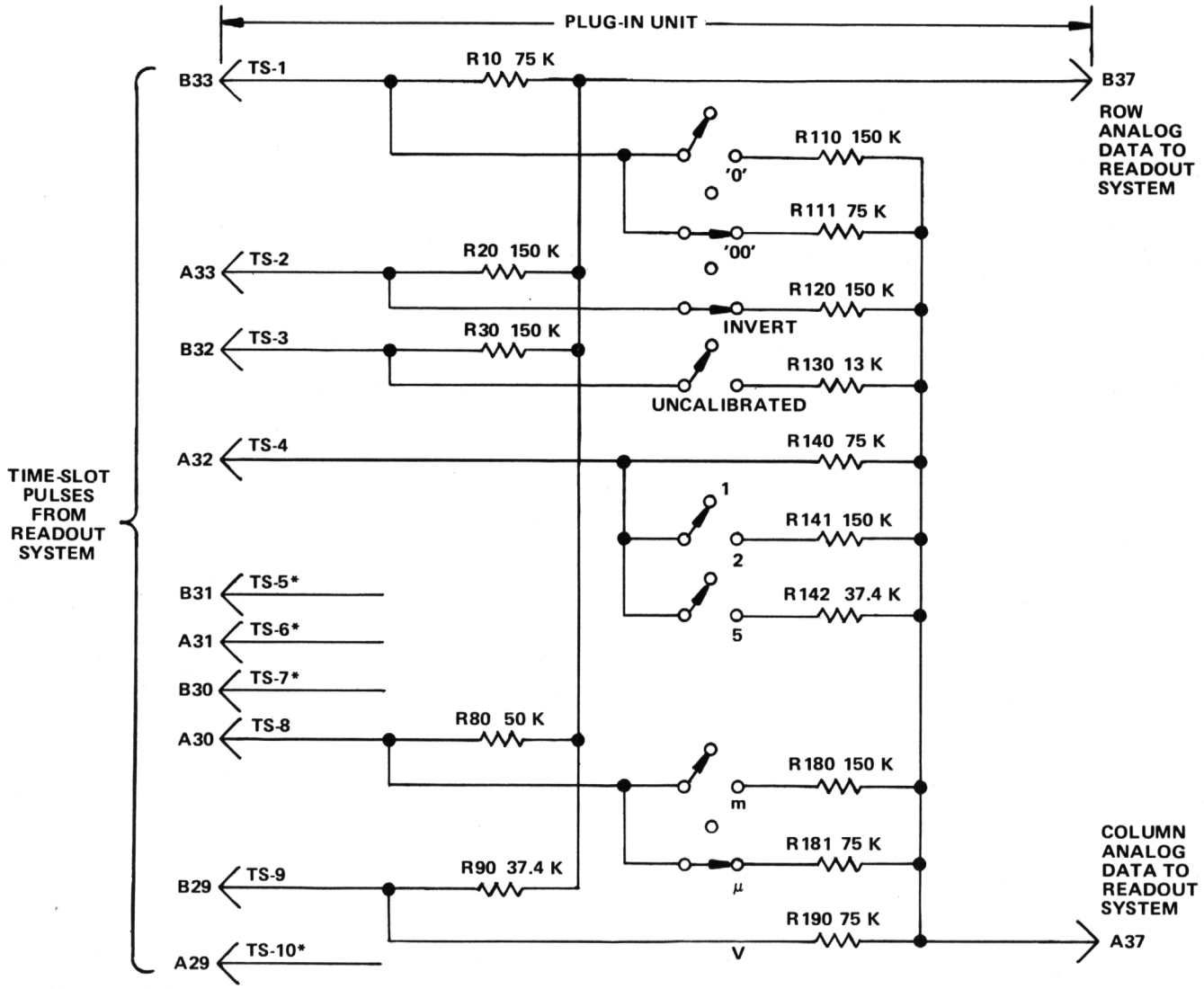

* NOT USED IN STANDARD FORMAT.

Fig. 2-36. Typical encoding scheme for voltage-sensing plug-in unit. Coding shown for deflection factor of 100 microvolts.

http://manoman.sqhill.com

current waveform of row analog data, which results from the time-slot pulses. Each of the row levels of current shown in these waveforms corresponds to 100 microamperes of current. The row numbers on the left-hand side of the waveform correspond to the rows in the Character Selection Matrix (see Fig. 2-29). The row analog data is connected back to the Readout System via the plug-in unit Interface connector (terminal B37 for Channel 1 and terminal B38 for Channel 2).

The Column analog data is defined by resistors R110 through R190 (see Fig. 2-36). The program resistors are connected to the time-slot lines by switch closures to encode the desired data. The data as encoded by the circuit shown in Fig. 2-36 indicates a 100-microvolt sensitivity with the crt display inverted and calibrated deflection factors. This results in the idealized output current waveforms shown in Fig. 2-37B at the column analog data output (Interface connector terminal A37 for Channel 1 and terminal A38 for Channel 2).

Resistor R111, connected between time-slot 1 and the column analog data output, encoded two units of current during time-slot 1. Referring to the Character Selection Matrix (Fig. 2-29), two units of column current, along with the two units of row current encoded by resistor R10 (row 3), indicates that two zeros should be added to the display. Resistor R120 adds one unit of column current during time-slot 2 and, along with the one unit of current from the row output, the Readout System is instructed to add an invert arrow to the display. Resistor R130 is not connected to the time-slot 3 line, since the deflection factor is calibrated. Therefore, there is no column current output during this time-slot and no display on the crt. (See Display-Skip Generator for further information.)

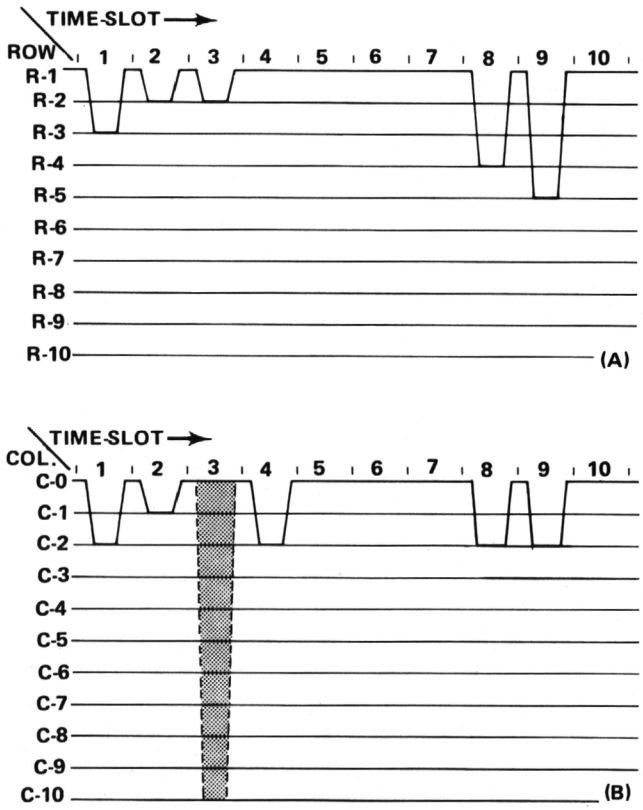

Fig. 2-37. Idealized current waveforms of (A) Row analog data. (B) Column analog data.

During time-slot 4, two units of column current are encoded by R140. There is no row current encoded during this time-slot; this results in the numeral 1 being displayed on the crt. Neither row nor column analog data is encoded during time-slots 5, 6, and 7 as defined by the Standard Readout Format. During time-slot 8, two units of column current and three units of row current are encoded by resistors R181 and R80, respectively. This addresses the μ prefix in the Character Selection Matrix.

The final data output is provided from time-slot 9 by R190 being connected to the column output and R90 to the row output. These resistors encode two units of column current and four units of row current to cause a V (volts) to be displayed. Time-slot 10 is not encoded, in accordance with the Standard Readout Format. The resultant crt readout will be ↓ 100 μV.

In the above example, the row analog data was programmed to define which row of the Character Selection Matrix was addressed to obtain information in each time-slot. The column data changes to encode the applicable readout data as the operating conditions change. For example, if the variable control of the plug-in unit was activated, R130 would be connected between time-slot 3 and the column analog data output line (see Fig. 2-36). This encodes 10 units of column current (see shaded area in time-slot 3 of the waveform shown in Fig. 2-37B). Since one unit of row current is also encoded during this time-slot by R30, a > symbol is added to the display. The crt readout will now show ↓ > 100 μV. In a similar manner, the other switches can change the encoded data for the column output and thereby change the readout display. See the descriptions which follow for decoding this information.

The column analog data encoded by most plug-in units can be modified by attenuator probes connected to the input connectors of amplifier plug-in units. A special coding ring around the input connector of the plug-in unit senses the attenuation ratio of the probe (with readout-coded probes only). The probe contains a circuit which provides additional column current. For example, if a 10X atten-

http://manoman.sqhill.com

uator probe is connected to a plug-in unit encoded for 100 microvolts as shown in Fig. 2-36, an additional unit of current is added to the column analog data during time-slot 1. Since two units of current were encoded by R111 (see Fig. 2-36), this additional current results in a total of three units of column analog current during this time-slot. Referring to the Character Selection Matrix (Fig. 2-29), three units of column current, along with the two units of row current encoded by R10, indicates that the prefix should be shifted one column to the left. Since this instruction occurs in the same time-slot that previously indicated that two zeros should be added to the display and only one instruction can be encoded during a time-slot, the zeros do not appear in the display. The crt readout will now be changed to 1 mV (readout program produced by plug-in unit same as for previous example).

Three other lines of information are connected from the plug-in compartments to the Readout System. The column and row analog data from Channel 2 of a dual-channel plug-in unit are connected to the Readout System through terminals A38 and B38 of the plug-in interface, respectively. Force readout information is encoded on terminal A35; the function of this input is described under Column and Row Data Switches.

The preceding information gave a typical example of encoding data from an amplifier plug-in unit. Specific encoding data and circuitry is shown in the individual plug-in unit manuals.

Column and Row Data Switches. The encoding data from the plug-in units is connected to the Column and Row Data Switch stages. A column-data line and a row-data line convey analog data from each of the six data sources (two channels from each of the three plug-in compartments).

The Column Data Switch U2190 and the Row Data Switch U2180 receive the Channel Address Code from the Channel Counter (U2250). This binary code directs the Column Data Switch and the Row Data Switch as to which channel should be the source of the encoding data. Table 2-3 gives the six combinations of the Channel Address code and the resultant channel selected with each combination. The Column and Row Data Switch stages have nine inputs (two of which are unused in three plug-in compartment oscilloscopes) and provide a time multiplexed output at pin 7. The output includes the information from all of the input channels. Eight of the nine inputs to each stage (two inputs unused in the 7313/R7313) originate in the plug-in units. The ninth input comes from a special data-encoding network composed of eight resistors each: R2191 through R2199 and R2201 through R2209. (See Zeros Logic and Memory description for further information about the ninth channel.)

In addition to the encoding data inputs from the plug-in units, inputs are provided to the Column Data Switch from the VERTICAL MODE switch (by way of P2118) to inhibit the readout for any plug-in unit not selected for display (see diagram 7). When a plug-in unit is selected, a HI level is applied to the inhibit input for the opposite channel. The channel inhibit lines are LO only when the associated plug-in unit has been selected for display. When a unit is not selected, the respective line is HI to forward bias the associated diodes: CR2162-CR2163, CR2166-CR2167, CR2170-CR2171, or CR2174-CR2175. The forward-biased diodes cause the channel switches to bypass the encoded data from the inhibited channel. However, since it may be desired to display information from special-purpose plug-in units (even though they do not produce a normal waveform display on the crt), a feature is provided to override the channel inhibit. This is done by applying a LO to the associated Force Readout input. The LO level diverts the HI channel-inhibit current and allows the data from this plug-in unit to reach the Column Data Switch, even though it has not been selected for display by the mode switch.

Row Match adjustment R2183 sets the gain of the Row Data Switch to match the gain of the Row Decoder (U2185) for correct output. Column Match adjustment R2214 performs the same function for the Column Data Switch stage.

Display-Skip Generator. This stage comprises Q2215, Q2223, Q2225, and Q2229. It monitors the time-multiplexed column data at the output of the Column Data Switch (U2190) during each time-slot to determine if the information at this point is valid data that should result in a crt display. Quiescently, there is about 100 microamperes of current flowing through R2213 from Q2240 and the Zeros Logic and Memory stage. (The purpose of this quiescent current will be discussed in connection with the Zeros Logic and Memory stage.) This current biases Q2215A so that its base is about 0.2 volt more positive than the base of Q2215B in the absence of column data. Therefore, since Q2215A and Q2215B are connected as a comparator, Q2215A will remain on unless its base is pulled more negative than the base of Q2215B.

The analog data output from the Column Data Switch U2190 produces a 0.5-volt (approximately) change for each unit of column current that has been encoded by the plug-in unit. Whenever any information appears at the output of the Column Data Switch, the base of Q2215A is pulled more negative than the base of Q2215B, resulting in a negative (LO) Display-Skip output to the Timer stage through Q2225. Recall that a LO was necessary at the skip input of the Timer so it could perform the complete sequence necessary to display a character.

Q2223-Q2229 also provide Display-Skip action. The End-of-Word level connected to their emitters is LO only

http://manoman.sqhill.com

during time-slot 1. This means they are enabled only during this time-slot. These transistors allow the Zeros Logic and Memory stage (U2232) to generate a Display-Skip signal during time-slot 1 when information that is not to be displayed on the crt has been stored in memory (further information is given under Zeros Logic and Memory).

Column and Row Decoders. The Column Decoder U2244 and Row Decoder U2185 sense the magnitude of the analog voltages at their inputs (pin 10) and produce a binary output on one of ten lines (eight lines on 7313/R7313 Row Decoder U2185) corresponding to the column or row data encoded by the plug-in unit. These outputs provide the Column Digital Data and Row Digital Data, which is used by the Character Generator stages to select the desired character for display on the crt. The column and row data is also used throughout the Readout System to perform other functions.

The input current at pin 9 of the Column Decoder stage is steered to only one of the ten Column Digital Data outputs. The size of the displayed character is determined by the value of R2217. When a Display-Skip signal is present (collector of Q2225 HI), pin 9 is pulled HI through CR2226. This ensures that no current is connected to the Character Generator stage under this condition. Notice the corresponding input on the Row Decoder. This input is connected to ground and causes only one of the ten row outputs to saturate to ground.

The network at the input of the Row Decoder, made up of Q2153 and its associated components, is a Row-14 detector that produces the Jump Command. This row current is encoded by special-purpose plug-ins to cause all or part of a word to be jumped. Whenever row 14 (thirteen units of row current, or 1.3 milliamperes) is encoded, the base of Q2153 is pulled negative enough so that this transistor is reverse biased to produce a HI Jump Command output at its collector. The Jump Command is connected to the Word Trigger stage (U2155) to advance the Channel Counter to the next word and to reset the Time-Slot Counter (U2250) to time-slot 1.

Zeros Logic and Memory. U2232 stores data encoded by the plug-in units to provide zeros-adding and prefix-shifting logic for the Readout System. The Strobe pulse at pin 15 goes positive when the data has stabilized and can be inspected. This activates the Zeros Logic and Memory stage so that it can store the encoded data. A block representation of the memory sequence of U2232 is shown in Fig. 2-38.

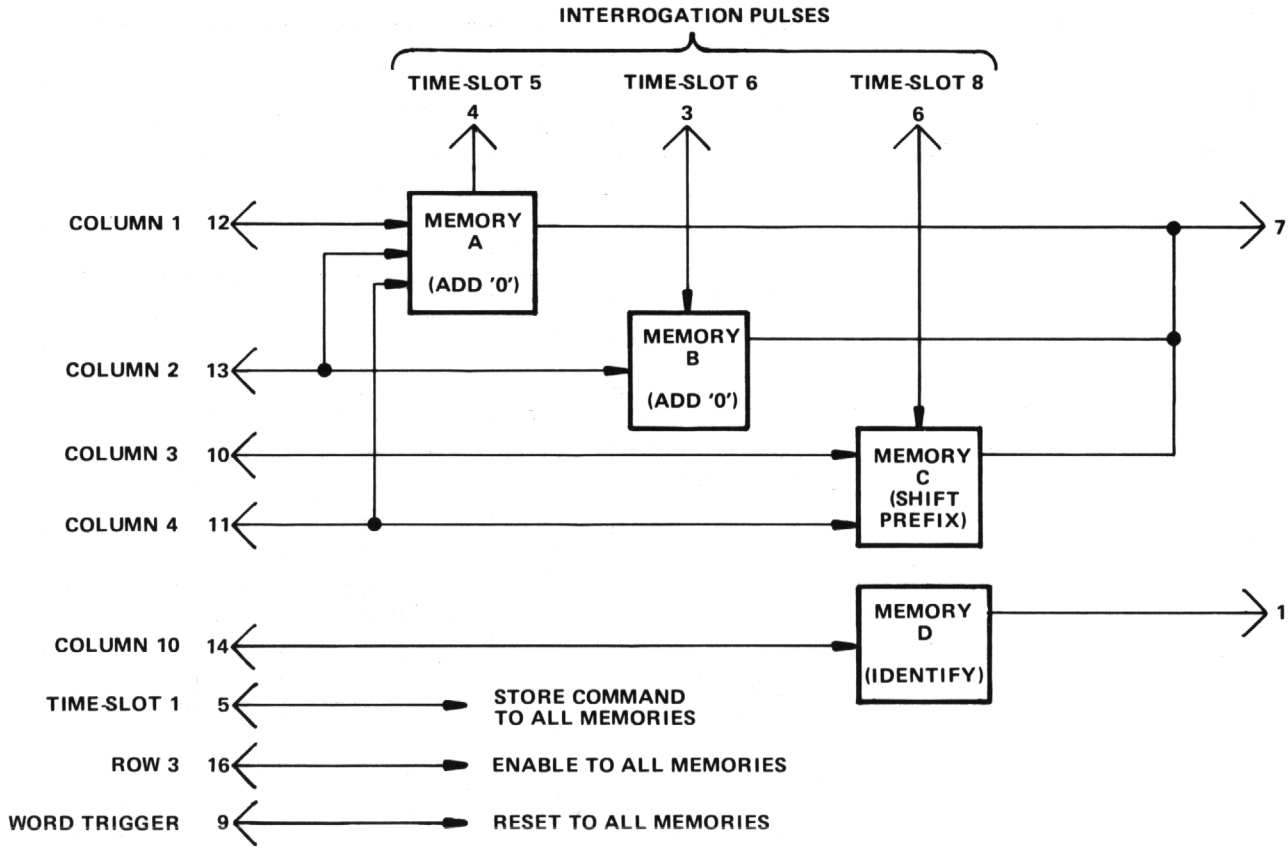

Fig. 2-38. Block representation of memory sequence in U2232.

http://manoman.sqhill.com

Typical output waveforms for the five possible input conditions that can occur are shown in Fig. 2-39. When time-slot 1 occurs, a store command is given to all of the memories. If the plug-in unit encoded data for column 1, 2, 3, 4, or 10 during time-slot 1, the appropriate memory (or memories) is set. Notice that row 3 information from the Row Decoder must also be present at pin 16 for data to be stored in the memory of U2232.

If data was encoded during time-slot 1, a negative-going output is produced at pin 7 while the memories are being set. This negative-going pulse is connected to the base of Q2229 in the Display-Skip Generator to produce a Display-Skip output. Since the information encoded during time-slot 1 was only provided to set the memories and not intended to be displayed on the crt at this time, the Display-Skip output prevents a readout display during this time-slot.

INPUT PIN OF U2232 ACTIVATED	COMMAND	TIME-SLOTS
14	IDENTIFY	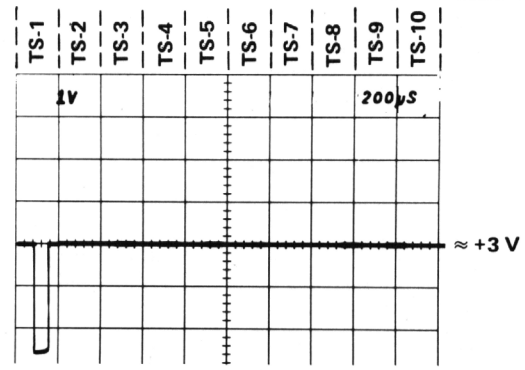
12	ADD ONE ZERO	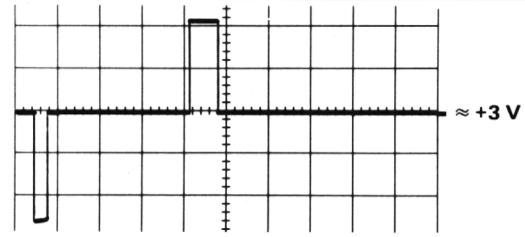
13	ADD TWO ZEROES	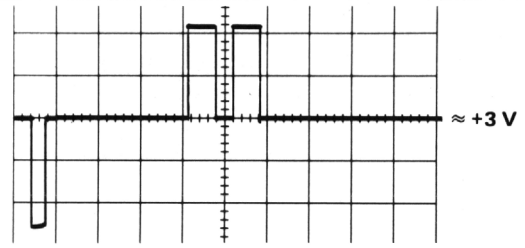
10	DECREASE PREFIX	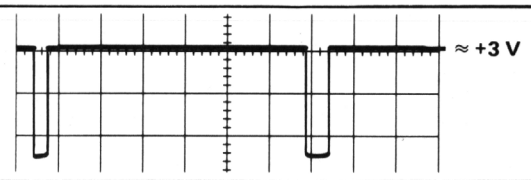
11	DECREASE PREFIX AND ADD ONE ZERO	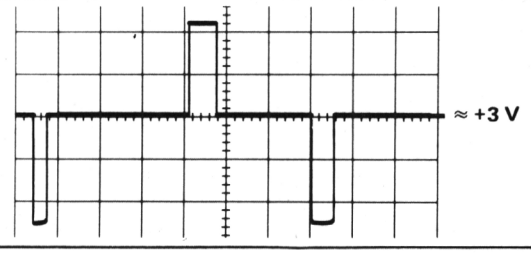

Fig. 2-39. Typical output waveform for Zeroes Logic and Memory stage operation (pin 7 of U2232).

http://manoman.sqhill.com

During time-slot 5, memory A is interrogated. If information was stored in this memory, a positive-going output is produced at pin 7. This pulse is connected to pin 10 of the Column Decoder through Q2240 to add one unit of current at the input of the Column Decoder. This produces a zero after the character displayed during time-slot 4. During time-slot 6, memory B is interrogated to see if another zero should be added. If another zero is necessary, a second positive output is produced at pin 7, which again results in a column 1 output from the Column Decoder and a second zero in the crt display.

Finally, memory C is interrogated during time-slot 8 to obtain information on whether the prefix should be changed, or left at the value that was encoded. If data has been encoded that calls for a shift in prefix, a negative-going output level is produced at pin 7. This negative level subtracts one unit of column current from the data at the input to the Column Decoder. Notice on the Character Selection Matrix of Fig. 2-29 that when row 4 is programmed, a reduction of one column results in a one-column shift of the prefix. For example, with the 100 μV program shown in Fig. 2-36, if the data received from the plug-in unit called for a shift in prefix, the crt readout would be changed to 1 mV (zeros deleted by program; see Encoding the Data).

The 100 microamperes of quiescent current through R2214 provided by Q2240 (see Display-Skip Generator) allows the prefix to be shifted from m (100 microamperes column current, column 1) to no prefix (zero column current, column zero) so only the unit of measurement encoded during time-slot 9 is displayed. Notice that reducing the prefix program from column 1 to column 0 programs the Readout System to not display a character at this readout location.

A further feature of the Zeros Logic and Memory is the Identify function. If 10 units of column current are encoded by the plug-in unit along with row 3 during time-slot 1, the Zeros Logic and Memory produces a negative-going output pulse at pin 1 to switch the Column Data Switch and Row Data Switch to the ninth channel. Then, time-slot pulses 2 through 9 encode an output current by way of resistors R2191 through R2199 for column data and R2201 through R2209 for row data. This provides the currents necessary to display the word IDENTIFY in the word position allotted to the channel that originated the Identify command. After completion of this word, the Column Data Switch and Row Data Switch continue with the next word in the sequence.

The Word Trigger signal from the Word Trigger stage (U2155) is connected to pin 9 of U2232 through C2242. At the end of each word of readout information, this pulse goes LO. This erases the four memories in the Zeros Logic and Memory in preparation for the data to be received from the next channel.

Character Generators. This stage consists of five similar integrated circuits (U2270 through U2278), which generate the X (horizontal) and Y (vertical) outputs at pins 16 and 1, respectively, to produce the character display on the crt. Each integrated circuit can produce 10 individual characters. U2270 (designated "Numerals") can produce the numerals 0 through 9 shown in row 1 of the Character Selection Matrix (Fig. 2-29). U2272 can produce the symbols shown in row 2 of the Character Selection Matrix and U2274 produces the prefixes and some letters, used as prefixes, shown in row 4. U2276 and U2278 produce the remaining letters shown in row 5 and 6 of the Character Selection Matrix.

All of the Character Generator stages receive the Column Digital Data from the Column Decoder U2244 in parallel. However, only one of the Character Generators receives row data at a particular time and only the stage receiving this row data is activated. For example, if column 2 is encoded, the five Character Generators are enabled so that either a 1, <, μ, V, or an N can be produced. If row 4 has been encoded at the same time, only the Prefix Character Generator U2274 will produce an output to result in a "μ" being displayed. The activated Character Generator provides current outputs for the Format Generator U2284 to produce the selected character on the crt. In a similar manner, any of the characters shown in the Character Selection Matrix can be displayed by correct addressing of the row and column.

Decimal Point Logic and Character Position Counter. U2260 performs two functions. The first function is to add a staircase current to the X (horizontal) signal to space the characters horizontally on the crt. After each character is generated, the negative-going edge of the Ready signal at pin 5 advances the Character Position Counter. This produces a current step output at pin 3 which, when added to the X signal causes the next character to be displayed one character space to the right. This stage can also be advanced when a Space instruction is encoded so a space is left between the displayed characters on the crt. Row 10 information from the Row Decoder is connected to pin 4 of U2260. When row 10 and column 0 are encoded, the output of this stage advances one step to move the next character another space to the right. However, under this condition, no display is produced on the crt during this time-slot, since the Character Generators are not activated.

Time-slot pulses 1, 2, and 3 are also connected to pin 4 of U2260 through VR2262, VR2263, and VR2264 respectively and R2262-R2265. This configuration adds a space to the displayed word during time-slots 1, 2, and 3 even if information is not encoded for display during these time-slots. With this feature, the information displayed during time-slot 4 (scaling data) always starts in the fourth character position whether data has been displayed in the previous time-slots or not. Therefore, the resultant crt display does not shift position as normal-invert or cal-uncal

http://manoman.sqhill.com

information is encoded. The Word Trigger pulse connected to pin 8 of U2260 resets the Character Position Counter to the first character position at the end of each word.

The Decimal Point Logic portion of this stage allows decimal points to be added to the crt display. With the Standard Readout Format, row 7, encoded coincident with columns 3 through 7, addresses a decimal at one of the five locations identified in row 7 of the Character Selection Matrix (Fig. 2-29). This instruction refers to the decimal point location in relation to the total number of characters possible in one word (see Fig. 2-40). For example, column 3 encoded with row 7 during time-slot 1 places a decimal point in location No. 3. As shown in Fig. 2-40, this displays a decimal point after the third character that can be displayed on the crt. (The first three time-slots produce a space whether data is encoded or not; see previous paragraph.)

When decimal-point data is encoded, the crt is unblanked so a readout display is presented. Since row 7 does not activate any of the five Character Generators, the crt beam is deflected vertically by the application of row-7 data to the Y input of the Format Generator (U2284) through R2280. This places the decimal point between the characters along the bottom line of the readout word. After the decimal point is produced in the addressed location, the crt beam returns to the location indicated by the Character Position Counter to produce the remainder of the display.

Format Generator. The X- and Y- deflection signals produced by the Character Generator stage are connected to pins 2 and 7, respectively, of Format Generator U2284. The Channel Address Code from the Channel Counter U2250 is also connected to pins 1, 8, and 15 of this stage. The Channel Address Code directs the Format Generator to add current to the X and Y signals to deflect the crt beam to the area of the crt associated with the plug-in channel that originated the information (see Fig. 2-28). The Channel Address Code and the resultant word positions are shown in Table 2-3. The Ready signal at pin 13 (coincident with the Vertical and Horizontal OFF Command output) activates this stage when a character is to be displayed on the crt. R2274 and R2275 determine the horizontal and vertical size, respectively, of the displayed characters. R2273 provides an adjustment to set the vertical size of the characters (Character Height) as desired. The character position current from the Decimal Point Logic and Character Position stage is added to the X (horizontal) input signal to space the characters horizontally on the crt (see previous discussion).

Y-Output Amplifier. The Y-output signal at pin 6 of Format Generator U2284 is connected to the Y-Output Amplifier Q2287-Q2299. This stage provides a low-impedance load for the Format Generator while providing isolation between the Readout System and the driven circuits. Vertical Separation adjustment R2291 changes the gain of this stage to control the vertical separation between the readout words displayed at the top and bottom of the graticule area.

X-Output Amplifier. Q2286-Q2296 operates like the Y-Output Amplifier, to provide the horizontal deflection from the readout signal available at pin 4 of U2284. The gain of this stage is fixed by the values of the resistors in the circuit.

Display Sequence. Figure 2-41 shows a flow chart for the Readout System. This chart illustrates the sequence of events that occurs in the Readout System each time a character is generated and displayed on the crt.

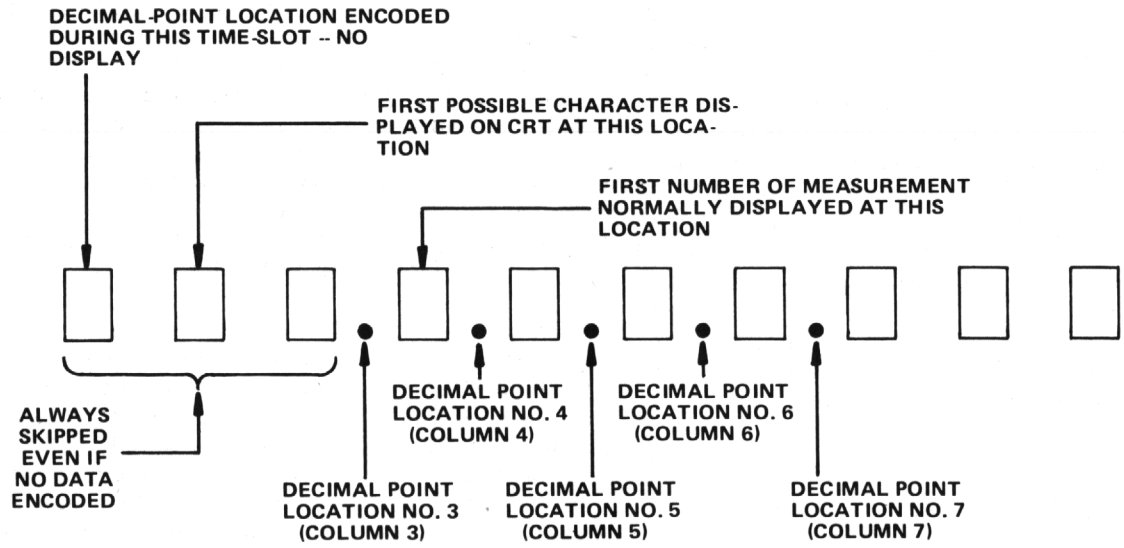

Fig. 2-40. Readout word relating 10 possible character locations to the decimal point instructions that can be encoded and to the resultant cathode-ray tube display.

http://manoman.sqhill.com

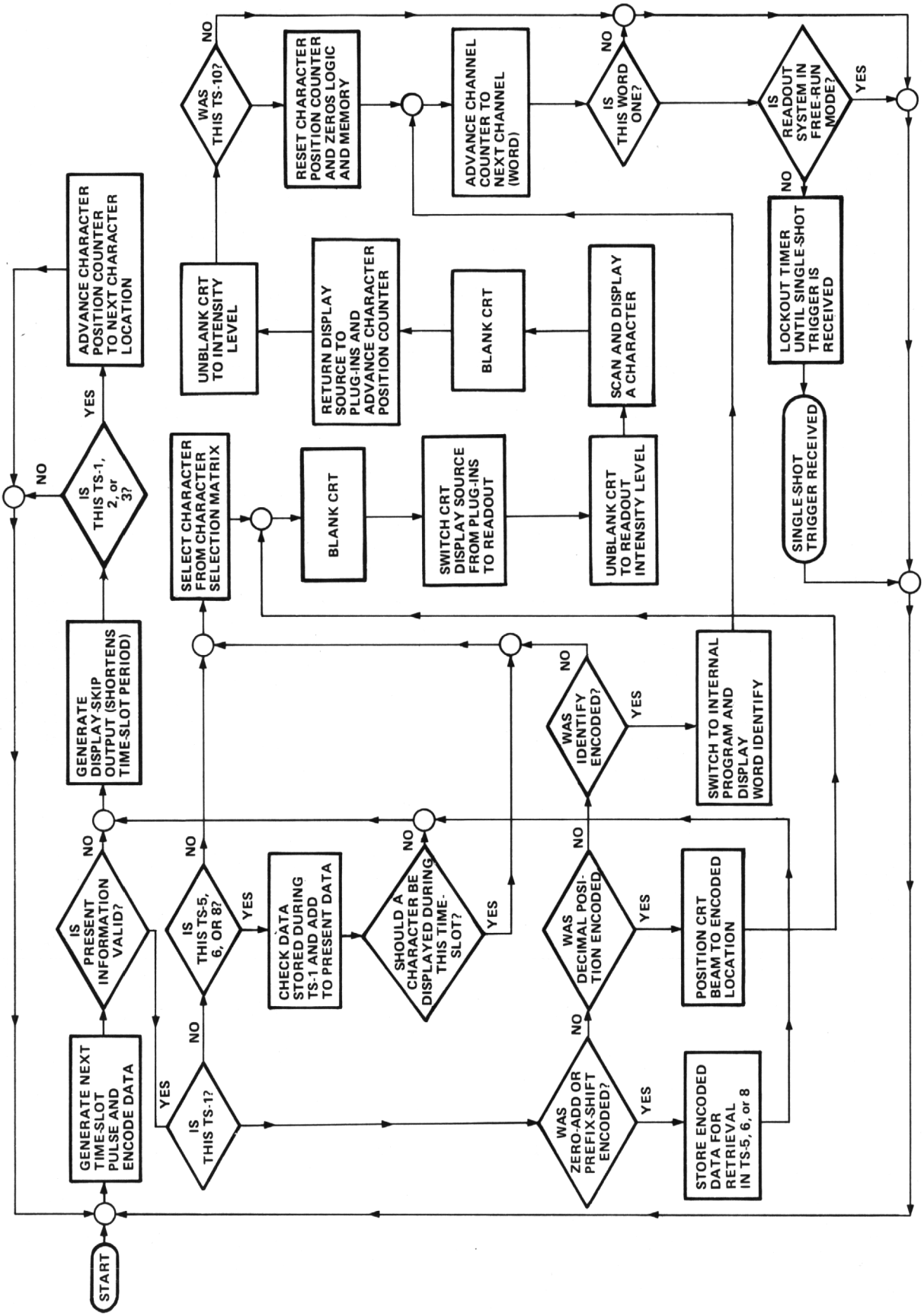

Fig. 2-41. Flow chart for character generation by the Readout System.

http://manoman.sqhill.com

MAINTENANCE

This section of the manual contains maintenance information for use in preventive maintenance, corrective maintenance, or troubleshooting of the 7313/R7313.

Panel Removal

WARNING

Dangerous potentials exist at several points throughout this instrument. When the instrument is operated with the covers removed, do not touch exposed connections or components. Some transistors have voltages present on their cases. Disconnect the power source before cleaning the instrument or replacing parts.

The side and bottom panels protect the instrument from dust in the interior and provide protection to personnel from operating potentials present. In addition, they reduce EMI radiation from the instrument and EMI interference from other equipment.

7313. The side panels are held in place by slotted fasteners. To remove the side panels, turn each fastener counterclockwise a quarter turn with a large screwdriver, coin, or similar device. Then, lift the side panel away from the instrument.

To remove the bottom panel of the 7313, remove two phillips screws from the rear of the panel and the two scope-mobile retainer blocks from the front panel. Lift the bottom panel from the instrument.

A plastic cover on the rear of the instrument, held in place with four screws, allows access to the low-voltage power supply regulating transistors.

R7313. The top cover is held in place with eight screws. To remove the cover, loosen three screws from each side of the cover and remove two screws from the top.

A panel on the left side of the instrument, held in place with six screws, allows access to the vertical amplifier circuit board. Refer to Fig. 7-2 in the diagrams section of the manual for location of circuit board.

A metal shield in the center of the instrument (secured with five screws) allows access to the Readout circuit board. A metal shield on the rear of the instrument (secured with four screws) covers the Low-Voltage Regulator board.

Power Unit Removal

7313. The power unit can be removed from the rear of the 7313 to change the operating voltage source and range, to gain access to the logic and rectifier boards, and for power unit maintenance. Use the following procedure for power unit removal:

1. Disconnect the instrument from the power source.

2. Remove three screws from each side of the power unit (six screws total). Refer to the 7313 exploded view at the rear of this manual.

3. Slide the power unit out the rear of the chassis. To change the line voltage operating range or source, it is necessary to slide the power unit only part way out (see Operating Information). To completely remove the power unit, disconnect all pin connectors and cables.

R7313. The power unit can be removed from the rear of the R7313 to change the operating voltage source and range, to gain access to the logic and rectifier boards, and for power unit maintenance. Use the following procedure to remove the power unit.

1. Disconnect the instrument from the power source.

2. Remove three screws from the left side of the instrument (as viewed from the rear of the instrument) and remove two screws from the bottom of the instrument. Some R7313 instruments have four additional screws on the top of the power unit that must be removed. Refer to the R7313 exploded view at the rear of this manual.

3. Slide the power unit out the rear of the chassis. To completely remove the power unit, disconnect all pin connectors and cables.

http://manoman.sqhill.com

PREVENTIVE MAINTENANCE

Preventive maintenance consists of cleaning, visual inspection, lubrication, etc. Preventive maintenance performed on a regular basis may prevent instrument breakdown and will improve the reliability of this instrument. The severity of the environment to which the 7313/R7313 is subjected determines the frequency of maintenance. A convenient time to perform preventive maintenance is preceding recalibration of the instrument.

Cleaning

General. The 7313/R7313 should be cleaned as often as operating conditions require. Accumulation of dirt in the instrument can cause overheating and component breakdown. Dirt on components acts as an insulating blanket and prevents efficient heat dissipation. It also provides an electrical conduction path which may result in instrument failure. The side panels provide protection against dust in the interior of the instrument. Operation without the panels in place necessitates more frequent cleaning.

CAUTION

Avoid the use of chemical cleaning agents which might damage the plastics used in this instrument. In particular, avoid chemicals that contain benzene, toluene, xylene, acetone, or similar solvents.

Air Filter. (R7313 Only) The air filter should be visually checked every few weeks and cleaned or replaced if dirty. More frequent inspections are required under severe operating conditions. If the filter is to be replaced, order new filters from your local Tektronix Field Office or representative; order by Tektronix Part No. 378-0041-01. The following procedure is suggested for cleaning the filter.

1. Remove the filter by pulling it out of the retaining frame on the rear panel. Be careful not to drop any of the accumulated dirt into the instrument.

2. Flush the loose dirt from the filter with a stream of hot water.

3. Place the filter in a solution of mild detergent and hot water and let soak for several minutes.

4. Squeeze the filter to wash out any dirt which remains.

5. Rinse the filter in clean water and let dry.

6. Coat the dry filter with an air-filter coating (available from air conditioner suppliers or order Tektronix Part No. 006-0580-00).

7. Let the filter thoroughly dry.

8. Reinstall the filter in the retaining frame.

Exterior. Loose dust accumulated on the outside of the 7313/R7313 can be removed with a soft cloth or small brush. The brush is particularly useful for dislodging dirt on and around the front-panel controls. Dirt that remains can be removed with a soft cloth dampened in a mild detergent and water solution. Abrasive cleaners should not be used.

Crt. Clean the plastic light filter, faceplate protector, and the crt face with a soft, lint-free cloth dampened with denatured alcohol.

The crt mesh filter (furnished with Option 3 only) can be cleaned in the following manner:

1. Hold the mesh filter in a vertical position and brush lightly with a soft No. 7 water-color brush to remove light coatings of dust or lint.

2. Greasy residues or dried-on dirt can be removed with a solution of warm water and a neutral-pH liquid detergent. Use the brush to lightly scrub the filter.

3. Rinse the filter thoroughly in clean water and allow to air dry.

4. If any lint or dirt remains, use clean low-pressure air to remove it. Do not use tweezers or other hard cleaning tools on the filter, as the special finish may be damaged.

5. When not in use, store the mesh filter in a lint-free dust-proof container, such as a plastic bag.

Interior. Dust in the interior of the instrument should be removed occasionally due to its electrical conductivity under high humidity conditions. The best way to clean the interior is to blow off the accumulated dust with dry, low-pressure air. Remove any dirt which remains with a soft brush or a cloth dampened with a mild detergent and water solution. A cotton-tipped applicator is useful for cleaning in narrow spaces.

http://manoman.sqhill.com

The high-voltage circuits, particularly parts located in the high-voltage compartment, should receive special attention. Excessive dirt in these areas may cause high-voltage arcing and result in improper instrument operation.

Lubrication

The reliability of potentiometers, switches, and other moving parts can be maintained if they are kept properly lubricated. However, over-lubrication is as detrimental as too little lubrication. A lubrication kit containing the necessary lubricants and instructions is available from Tektronix, Inc. Order Tektronix Part No. 003-0342-01.

Visual Inspection

The 7313/R7313 should be inspected occasionally for such defects as broken connections, improperly seated semiconductors, damaged or improperly installed circuit boards, and heat-damaged parts.

The corrective procedure for most visible defects is obvious; however, particular care must be taken if heat-damaged components are found. Overheating usually indicates other trouble in the instrument; therefore, it is important that the cause of overheating be corrected to prevent recurrance of the damage.

Semiconductor Checks

Periodic checks of the semiconductors in the 7313/R7313 are not recommended. The best check of semiconductor performance is actual operation in the instrument. More details on checking semiconductor operation are given under troubleshooting.

Recalibration

To ensure accurate measurements, check the calibration of this instrument after each 1000 hours of operation or every six months if used infrequently. In addition, replacement of components may necessitate recalibration of the affected circuits. The calibration procedure can also be helpful in localizing certain troubles in the instrument. In some cases, minor troubles may be revealed or corrected by recalibration.

TROUBLESHOOTING

The following information is provided to facilitate troubleshooting of the 7313/R7313. Information contained in other sections of this manual should be used along with the following information to aid in locating the defective component. An understanding of the circuit operation is very helpful in locating troubles, particularly where integrated circuits are used.

Troubleshooting Equipment

The following equipment is useful for troubleshooting the 7313/R7313 Oscilloscope:

TRANSISTOR TESTER.

Description: Dynamic-type tester.

Purpose: To test the semiconductors used in this instrument.

Recommended type: Tektronix 577/177 Curve Tracer, Tektronix 576 Curve Tracer, 7CT1N Curve Tracer plug-in unit and a 7000-Series Oscilloscope system, or a 5CT1N Curve Tracer plug-in unit and a 5000-Series Oscilloscope.

MULTIMETER.

Description: 10 megohm input impedance and 0 to 500 volts range, ac and dc; ohmmeter, 0 to 50 megohms, accuracy within 3%. Test probes must be insulated to prevent accidental shorting.

Purpose: To check voltages and for general troubleshooting in this instrument.

NOTE

A 20,000 ohms/volt volt-ohm milliammeter (vom) can be used to check the voltages in this instrument if allowances are made for the circuit loading of the vom at high-impedance points.

TEST OSCILLOSCOPE.

Description: Frequency response, dc to 100 megahertz minimum; deflection factor, five millivolts to five volts/division and one milliampere to one ampere/division. A 10X, 10 megohm voltage probe should be used to reduce circuit loading for voltage measurement.

Purpose: To check operating waveforms in this instrument.

Recommended type: Refer to the Tektronix Products catalog for applicable oscilloscope system.

VARIABLE AUTOTRANSFORMER.

Description: Output variable from 0 to 140 volts, 10 amperes minimum rating. Must have three-wire power cord, plug, and receptacle.

Purpose: To vary the input line voltage when troubleshooting in the power supply.

Recommended type: General Radio W10MT3W Variac Autotransformer.

http://manoman.sghill.com

Troubleshooting Techniques

This troubleshooting procedure is arranged in an order which checks the simple trouble possibilities before proceeding with extensive troubleshooting. The first few checks ensure proper connection, operation, and calibration. If the trouble is not located by these checks, the remaining steps aid in locating the defective component. When the defective component is located, it should be replaced following the replacement procedures given under Corrective Maintenance.

1. Check Control Settings. Incorrect control settings can indicate a trouble that does not exist. If there is any question about the correct function or operation of any control, see the Operators Manual.

2. Check Associated Equipment. Before proceeding with troubleshooting of the 7313/R7313, check that the equipment used with this instrument is operating correctly. Check that the signal is properly connected and that the interconnecting cables are not defective. Also, check the power source. The associated plug-in units can be checked for proper operation by substituting other units that are known to be operating properly (preferably of the same types). If the trouble persists after substitution, the 7313/R7313 is probably at fault.

3. Visual Check. Visually check the portion of the instrument in which the trouble is located. Many troubles can be located by visual indications such as unsoldered connections, broken wires, damaged circuit boards, damaged components, and etc.

4. Check Instrument Calibration. Check the calibration of this instrument, or the affected circuit if the trouble appears in one circuit. The apparent trouble may only be a result of misadjustment or may be corrected by calibration. Complete calibration instructions are given in the Calibration section.

5. Isolate Trouble To A Circuit. To isolate trouble to a particular circuit, note the trouble symptom. The symptom often identifies the circuit in which the trouble is located. For example, poor focus indicates that the crt circuit is probably at fault. When trouble symptoms appear in more than one circuit, check affected circuits by taking voltage and waveform readings. Also check for the correct output signals at the rear-panel output connectors with a test oscilloscope (rear panel outputs deleted by Option 7). If the signal is correct, the circuit is working correctly up to that point. For example, correct sawtooth output indicates that the time-base unit and sawtooth out portion of the Output Signals circuit is operating correctly. If a malfunction in the Readout System is suspected of causing trouble to appear in the Z-Axis Amplifier, Vertical Amplifier, or Horizontal Amplifier circuits, the trouble can be localized by removing the Readout System circuit board (Readout System deleted by Option 7). This board can be removed without affecting the operation of other circuits in the instrument.

Incorrect operation of all circuits often indicates trouble in the power supply. Check first for correct voltage of the individual supplies. However, a defective component elsewhere in the instrument can appear as a power-supply trouble and may also affect the operation of other circuits.

If incorrect operation of the power supplies is suspected, connect the 7313/R7313 to a variable autotransformer. Then check each power supply for correct regulation with a dc voltmeter (3% accuracy), and correct ripple with a test oscilloscope. Vary the autotransformer throughout the regulating range of the 7313/R7313 and check that it is within the power supply tolerances given in Table 3-1. The voltages in Table 3-1 are measured between the power supply test points and chassis ground. Power supply test points are shown on Adjustment Locations pullout at the rear of this manual. If a power supply voltage is within the tolerance in Table 3-1, the supply can be assumed to be working correctly. If outside the given tolerance, the supply may be misadjusted or operating incorrectly. Use the procedure given in the Calibration section to adjust the power supply voltage.

TABLE 3-1

Power Supply Tolerance

Power Supply	Test Point	Output Voltage Tolerance	Typical Ripple (Peak-to-Peak)
−50 volt	TP50 or Pin 8 P1171	±0.1 volt	5 millivolts
−15 volt	Pin 8 P1170	±0.3 volt	2 millivolts
+5 volt	Pin 6 P1170	±0.15 volt	2 millivolts
+15 volt	Pin 5 P1170	±0.3 volt	2 millivolts
+50 volt	Pin 3 P1172	±0.6 volt	5 millivolts
+130 volt	Pin 4 P1170	±5.2 volts	300 millivolts
−75 volt	Pin 7 P1172	±2.25 volts	500 millivolts
+250 volt	Pin 1 P1172	±7.5 volts	500 millivolts

Figure 3-1 provides a guide for locating a defective circuit. Start at the top of the chart and perform the checks given on the left side of the page until a step is found that does not produce the indicated results. Further checks, or the circuit in which the trouble is probably located, are listed to the right of the step. This chart does not include checks for all possible defects; use steps 6 and 7 in such cases.

http://manoman.sqhill.com

After the defective circuit has been located, proceed with steps 6 and 7 to locate the defective component(s).

6. Check Voltages and Waveforms. Often the defective component can be located by checking for the correct voltage or waveform in the circuit. Refer to the diagrams section at the rear of the manual for correct voltages and waveforms.

7. Check Individual Components. The following procedures describe methods of checking individual components in the 7313/R7313. Components that are soldered in place are best checked by first disconnecting one end. This isolates the measurement from the effects of surrounding circuitry.

CAUTION

Disconnect the power source before removing or replacing semiconductors.

a. SEMICONDUCTORS. A good check of transistor operation is actual performance under operating conditions. A transistor can be most effectively checked by substituting a new component or one which has been checked previously. However, be sure that circuit conditions are not such that a replacement transistor might also be damaged. If substitute transistors are not available, use a dynamic tester. Static-type testers are not recommended, since they do not check operation under simulated operating conditions.

IC's (integrated circuits) can be checked with a voltmeter, test oscilloscope, or by direct substitution. A good understanding of circuit operation is essential to troubleshooting circuits using IC's. Use care when checking voltages and waveforms around the IC's so that adjacent leads are not shorted together. A convenient means of clipping a test probe to the 14- and 16-pin IC's is with an IC test clip. This device also serves as an extraction tool. The lead configuration for the semiconductors used in this instrument are shown on a pull-out page in the front of the diagrams section.

b. DIODES. A diode can be checked for an open or for a short circuit by measuring the resistance between terminals with an ohmmeter set to the R X 1k scale. The diode resistance should be very high in one direction and very low when the meter leads are reversed. Do not check tunnel diodes or back diodes with an ohmmeter.

CAUTION

Do not use an ohmmeter scale that has a high internal current. High currents may damage the diode.

The cathode end of each glass-encased diode is indicated by a stripe, a series of stripes, or a dot. For most silicon or germanium diodes with a series of stripes, the color code identifies the three significant digits of the Tektronix Part Number using the resistor color-code system (e.g., a diode color code pink, or blue, brown-gray-green indicates Tektronix Part No. 152-0185-00). The cathode and anode ends of metal-encased diodes can be identified by the diode symbol marked on the body.

c. RESISTORS. Check the resistors with an ohmmeter. See the Electrical Parts List for the tolerance of the resistors used in this instrument. Resistors normally do not need to be replaced unless the measured value varies widely from the specified value.

d. INDUCTORS. Check for open inductors by checking continuity with an ohmmeter. Shorted or partially shorted inductors can usually be found by checking the waveform response when high-frequency signals are passed through the circuit. Partial shorting often reduces high-frequency response (roll off).

e. CAPACITORS. A leaky or shorted capacitor can best be detected by checking resistance with an ohmmeter on the highest scale. Do not exceed the voltage rating of the capacitor. The resistance reading should be high after initial charge of the capacitor. An open capacitor can best be detected with a capacitance meter or by checking if the capacitor passes ac signals.

8. Repair And Readjust The Circuit. If any defective parts are located, follow the replacement procedures given in this section. Be sure to check the performance of any circuit that has been repaired or had any electrical components replaced.

http://manoman.sqhill.com

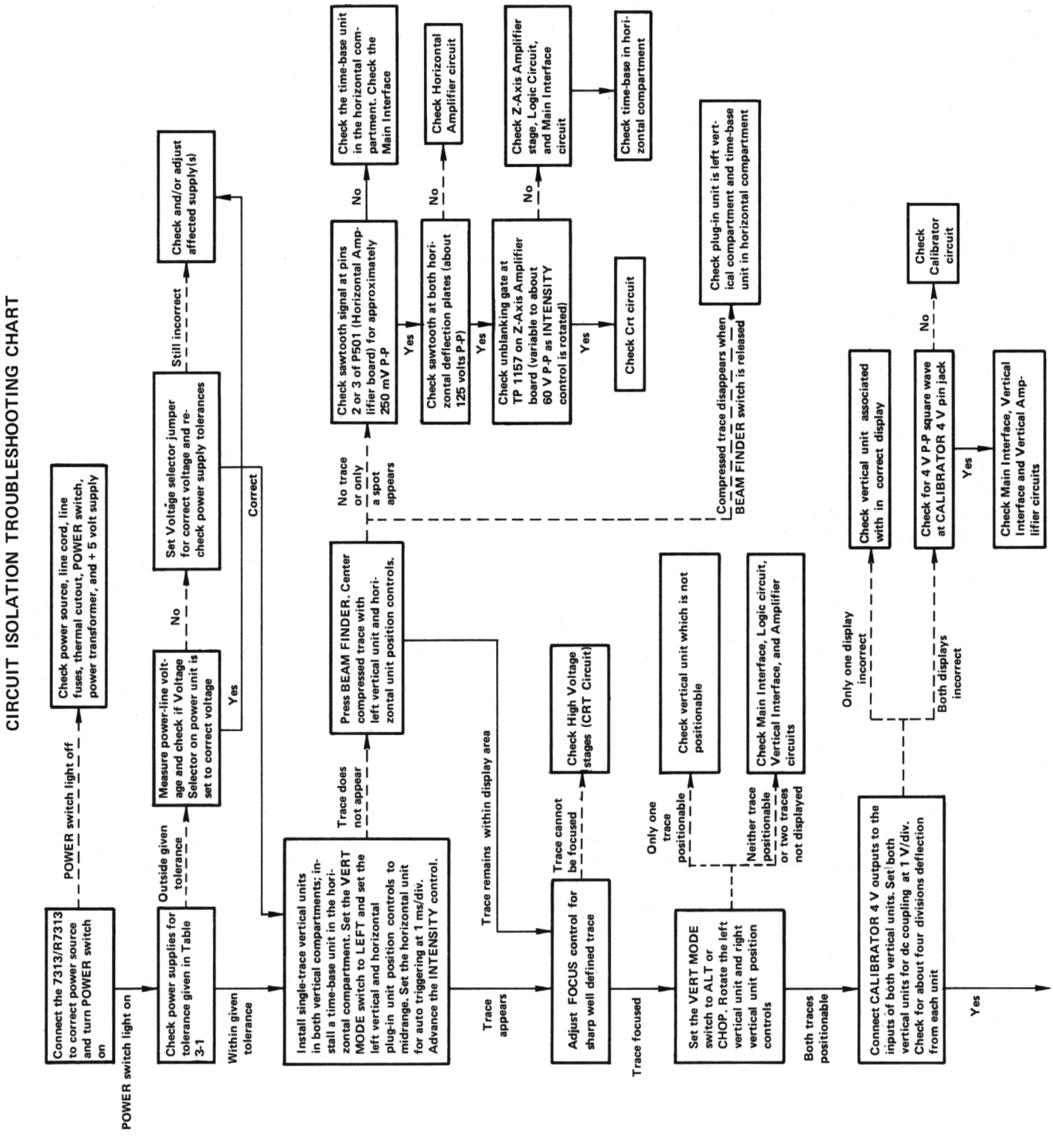

Fig. 3-1. 7313/R7313 Troubleshooting chart.

http://manoman.sqhill.com

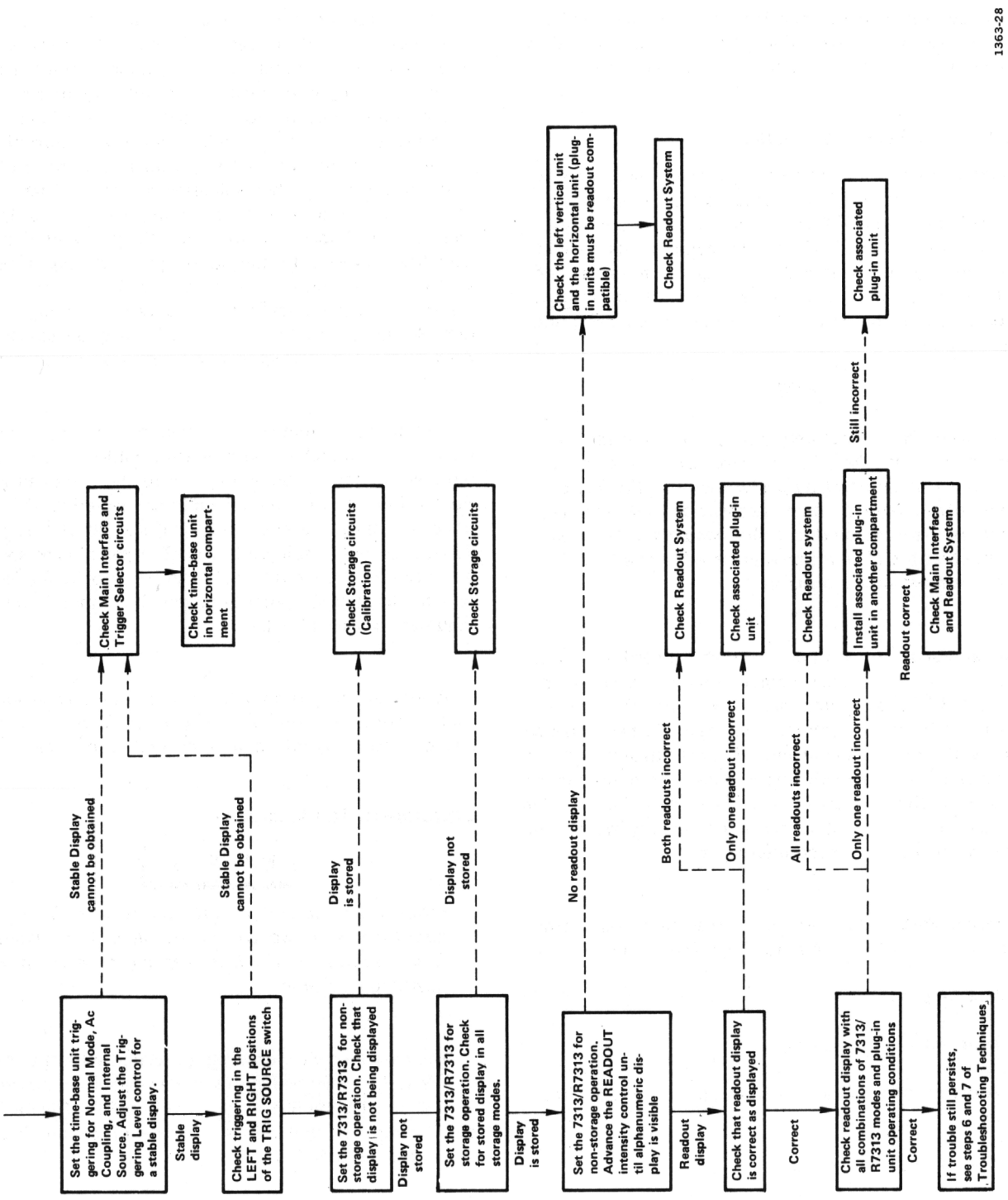

Fig. 3-1. 7313/R7313 Troubleshooting chart (cont).

http://manoman.sqhill.com

CORRECTIVE MAINTENANCE

Corrective maintenance consists of component replacement and instrument repair. Special techniques required to replace components in this instrument are given here.

Obtaining Replacement Parts

Standard Parts. All electrical and mechanical part replacements for the 7313/R7313 can be obtained through your Tektronix Field Office or representative. However, many of the standard electronic components can be obtained locally in less time than is required to order them from Tektronix, Inc. Before purchasing or ordering replacement parts, check the parts list for value, tolerance, rating, and description.

NOTE

When selecting replacement parts, it is important to remember that the physical size and shape of a component may affect its performance in the instrument, particularly at high frequencies. All replacement parts should be direct replacements unless it is known that a different component will not adversely affect instrument performance.

Special Parts. In addition to the standard electronic components, some special components are used in the 7313/R7313. These components are manufactured or selected by Tektronix, Inc. to meet specific performance requirements, or are manufactured for Tektronix, Inc. in accordance with our specifications. Most of the mechanical parts used in this instrument have been manufactured by Tektronix, Inc. Order all special parts directly from your Tektronix Field Office or representative.

Ordering Parts. When ordering replacement parts from Tektronix, Inc., include the following information:

1. Instrument type.
2. Instrument serial number.
3. A description of the part (if electrical, include circuit number).
4. Tektronix part number.

Soldering Techniques

WARNING

Before soldering, disconnect the instrument from the power source and allow approximately three minutes for the filter capacitors in the power supply to discharge.

The reliability and accuracy of this instrument can be maintained only if proper soldering techniques are used when repairing or replacing parts. General soldering techniques that apply to maintenance of any precision electronic equipment should be used when working on this instrument. Use only 60/40 rosin-core electronic-grade solder. The choice of soldering iron is determined by the repair to be made. When soldering on circuit boards, use a 35- to 40-watt pencil-type soldering iron with a 1/8-inch wide, wedge-shaped tip. Keep the tip properly tinned for best heat transfer to the solder joint. A higher wattage soldering iron may separate the wiring from the base material. Avoid excessive heat; apply only enough heat to remove the component or to make a good solder joint. Also, apply only enough solder to make a firm solder joint.

For metal terminals (e.g., switch terminals, potentiometers, etc.) a higher wattage-rating soldering iron may be required. Match the soldering iron to the work being done. For example, if the component is connected to the chassis or other large heat-radiating surface, it will require a 75-watt or larger soldering iron. The pencil-type soldering iron used on the circuit board can be used for soldering to switch terminals, potentiometers, or metal terminals mounted in plastic holders.

After soldering is completed, clean the area around the solder connection with a flux-remover solvent. Be careful not to remove any information printed in the area.

Component Replacement

WARNING

Before replacing components, disconnect the instrument from the power source and allow approximately three minutes for the filter capacitors in the power supply to discharge.

The exploded-view drawing associated with the Mechanical Parts List may be helpful in the removal or disassembly of individual components or subassemblies. Figure 7-2 in the Diagrams section shows the location of circuit boards within the 7313/R7313.

Circuit Board Replacement. If a circuit board is damaged beyond repair, replace the entire assembly including all solder-on components. Part numbers for completely wired circuit boards are given in the Mechanical Parts List.

Most of the circuit boards in this instrument are mounted on the chassis; pin connectors are used for most

http://manoman.sqhill.com

interconnections with other circuit boards and components. Several boards plug onto the front and rear of the Main Interface board; feed-through connectors connect the plug-on boards to the Main Interface board. Use the following procedure to remove the chassis-mounted circuit boards (removal instructions for plug-on boards requiring unique removal procedures will be given later).

The location of the pin connectors is shown on the circuit-board illustrations in the Diagrams section. Correct orientation of multi-pin connectors is indicated by an arrow molded into the connector housing (pin 1); a matching arrow is marked on the circuit board. Be sure these arrows are aligned as the multi-pin connector is replaced.

A. CHASSIS-MOUNTED BOARDS

1. Disconnect any pin connectors on the board or connected to other portions of the instrument. Note the order of these connectors so they can be correctly replaced.

2. Remove the securing screws.

3. Remove the board.

4. To replace the board, reverse the order of removal. Match the arrows on the multi-pin connectors to the arrows on the board. Correct location of the pin connectors is shown in the circuit board illustrations in the Diagrams section.

B. TRIGGER SELECTOR AND VERTICAL INTERFACE CIRCUIT BOARD REPLACEMENT

1. Remove plug-in units to gain access to the circuit boards.

2. Disconnect any coaxial end-lead or multi-pin connectors from the board.

3. Loosen all the securing screws from the board.

4. Pull on the edges of the board until the board clears the feed-through terminals. Hold the board parallel to the Main Interface board until the board is free, so as not to bend the feed-through terminals.

5. To replace the plug-on circuit board, position it so the feed-through pins and sockets mate properly.

6. Gently press the circuit board against the mounting surface. Be sure that all the feed-through pins and sockets mate properly.

7. Uniformly, tighten the securing screws. Recommended torque, four to six inch-pounds.

C. LOGIC CIRCUIT BOARD REPLACEMENT

1. Remove the power unit as described previously under power-unit removal.

2. Disengage the plastic snaps which secure the sides of the board.

3. Pull out on the edges of the board until the board clears the interconnecting terminals. Hold the board parallel to the Main Interface board until the board is free, so as not to bend the interconnecting terminals.

4. To replace the Logic board, position it so the guide holes in the board mate with the guide posts. Check that all the interconnecting pins and sockets mate properly.

5. Gently press the board against the Main Interface board until the plastic snaps secure the board.

D. MAIN INTERFACE CIRCUIT BOARD REPLACEMENT

1. Remove the power unit as described in power-unit removal.

2. Remove the plug-in units and the Vertical Interface board, Trigger Selector board, and Logic board.

3. Disconnect the multi-pin connectors and coaxial leads from the Main Interface board. Note the order of these connectors so they can be correctly replaced.

4. Remove the three screws from each plug-in compartment which hold the plug-in interface connectors to the chassis (two screws on the top and one screw on the bottom of each plug-in compartment; total of nine screws).

5. Remove the Main Interface board assembly from the rear of the instrument.

http://manoman.sqhill.com

6. To replace the Main Interface board, reverse the order of removal. Match the arrows on the multi-pin connectors to the arrows on the board. Correct location of the pin connector is shown on the circuit board illustration in the Diagrams section.

E. (7313) LOW VOLTAGE REGULATOR BOARD REPLACEMENT

1. Remove four screws securing the plastic cover to the Low Voltage Regulator board.

2. Remove two screws from each side of the rear-cabinet frame (four total).

3. Pull the Low Voltage Regulator Board assembly out far enough to allow multi-pin connectors and wire leads to be removed. Note the color coding of the wires and connectors so they can be correctly replaced.

4. Remove the Low Voltage Regulator board assembly from the rear of the instrument.

5. To replace the Low Voltage Regulator board assembly, reverse the removal procedure. Match the arrows on the multi-pin connectors to the arrows on the circuit board.

F. (R7313) LOW VOLTAGE REGULATOR BOARD REPLACEMENT

1. Remove four screws securing the metal shield to the low-voltage regulator board.

2. Remove two screws from the bottom of the instrument, one screw from the left side of the Low Voltage Regulator assembly (as viewed from the rear of the instrument), and two screws from the side of the instrument.

3. Pull the Low Voltage Regulator Board assembly out far enough to allow multi-pin connectors and wire leads to be removed. Note the color coding of the wires and connectors so they can be correctly replaced.

4. Remove the Low Voltage Regulator board assembly from the rear of the instrument.

5. To replace the Low Voltage Regulator board assembly, reverse the removal procedure. Match the arrows on the multi-pin connectors to the arrows on the circuit board.

G. CALIBRATOR BOARD REPLACEMENT

1. Disengage the POWER switch actuating rod from the switch and remove the rod through the front panel.

2. Loosen the set screws and remove the READOUT and INTENSITY control knobs from the front panel. Loosen the set screws from the FOCUS, ENHANCE, and VIEW TIME controls. Pull outward to remove these controls and the associated concentric switches.

3. Remove the securing nuts which hold the INTENSITY, FOCUS, VIEWTIME, and ENHANCE controls to the front panel.

4. Remove the plastic frame from the crt to expose the four screws securing the crt bezel. Loosen the screws and remove the front panel.

5. Remove the Readout board from the R7313 to allow removal of the Calibrator board (the Readout board does not need to be removed from the 7313; instruments with Option 1 do not have a Readout board). Remove two screws holding the Calibrator board (including the VERT MODE and TRIG SOURCE switches) to the front subpanel.

6. Pull the Calibrator board assembly out far enough to allow multi-pin connectors and wire leads to be removed. Note the color coding of the wires and connectors so they can be correctly replaced.

7. Remove the Calibrator board assembly from the rear of the front subpanel.

8. To replace the Calibrator board, reverse the removal procedure. Match the arrows on the multi-pin connectors to the arrows on the circuit board.

H. STORAGE SWITCH BOARD REPLACEMENT

1. Perform steps one through eight of Calibrator Board Replacement.

2. Remove two screws securing the Storage Switch board to the front subpanel.

3. Pull the Storage Switch board assembly out far enough to allow the multi-pin connectors and wire leads to be removed. Note the color coding of the wires and connectors so they can be correctly replaced.

http://manoman.sqhill.com

4. Remove the Storage Switch board assembly from the rear of the front subpanel.

5. To replace the Storage Switch board, reverse the removal procedure. Match the arrows on the multi-pin connectors to the arrows on the circuit board.

Plug-In Interface Connectors. The individual contacts of the plug-in interface connectors can be replaced. However, it is recommended that the entire Main Interface board be replaced if a large number of the contacts are damaged. An alternative solution is to refer the maintenance of the damaged Main Interface board to your Tektronix Field Office or representative. Use the following procedure to replace an individual contact of the plug-in interface connector:

1. Remove the connector cover (white plastic) from the side of the plug-in interface connector which needs repair.

2. Unsolder and remove the damaged contact.

3. Install the replacement contact. Carefully form it to fit against the connector body.

4. Replace the connector cover onto the plug-in interface connector. Check that the contact which was replaced is aligned with the other contacts.

Semiconductor Replacement. Semiconductors should not be replaced unless actually defective. If removed from their sockets during routine maintenance, return them to their original sockets. Unnecessary replacement of semiconductors may affect the calibration of this instrument. When semiconductors are replaced, check the operation of the part of the instrument that might have been affected.

WARNING

POWER switch must be turned off before removing or replacing semiconductors.

Replacement semiconductors should be of the original type or a direct replacement. Figure 7-1 (located in the Diagrams and Circuit Board Illustrations section) shows lead configuration of the semiconductors used in this instrument. Some plastic case transistors have lead configurations which do not agree with those shown here. If a replacement transistor is made by a different manufacturer than the original, check the manufacturer's basing diagram for correct basing. All transistor sockets in this instrument are wired for the standard basing as used for metal-cased transistors. For transistors which have heat radiators or are mounted on the chassis, use silicone grease when replacing these transistors.

WARNING

Handle silicone grease with care. Avoid getting silicone grease in the eyes. Wash hands thoroughly after use.

An extracting tool should be used to remove the 14- and 16-pin integrated circuits to prevent damage to the pins. This tool is available from Tektronix, Inc. Order Tektronix Part No. 003-0619-00. If an extracting tool is not available when removing one of these integrated circuits, pull slowly and evenly on both ends of the device. Try to avoid having one end of the integrated circuit disengage from the socket before the other, as this may damage the pins.

Access To Power Transistors. The power transistors associated with the Low Voltage Power Supply are mounted on the heat radiator at the rear of the instrument. To gain access to these transistors, remove the screws which secure the protective cover to the heat radiator. The transistors are mounted in sockets so they can be removed from the rear by taking out the two screws in the mounting tabs (cases elevated above chassis). To replace the sockets, remove the Low Voltage Regulator circuit board.

NOTE

After replacing a power transistor, check that the collector is not shorted to ground before applying power.

Interconnecting Pin Replacement. Two methods of interconnection are used in this instrument to connect the circuit boards with other boards and components. When the interconnection is made with a coaxial cable, a special end-lead connector plugs into a socket on the board. Other interconnections are made with a pin soldered onto the board. Two types of mating connectors are used for these interconnecting pins. If the mating connector is mounted on a plug-on circuit board, a special socket is soldered into the board. If the mating connector is on the end of a lead, an end-lead pin connector is used that mates with the interconnecting pin. The following information provides the replacement procedure for the various interconnecting methods.

Coaxial-Type End-Lead Connectors. Replacement of the coaxial-type end-lead connectors requires special tools and techniques; only experienced maintenance personnel should attempt replacement of these connectors. It is recom-

http://manoman.sghill.com

mended that the cable be replaced as a unit. Refer to your Tektronix Field Office or representative for cable replacement.

CAUTION

The following procedures are recommended for single-layer circuit boards only. Pin and socket replacement on multi-layer circuit boards should be performed only by specialized service personnel. Refer to your Tektronix Field Office or Service Center.

Circuit Board Pins And Pin Sockets. A circuit board pin replacement kit including necessary tools, instructions, and replacement pins is available from Tektronix, Inc. (Tektronix Part No. 040-0542-00). To replace a pin which is mounted on a circuit board, first disconnect any pin connectors. Then, unsolder the damaged pin and pull it out of the circuit board with a pair of pliers. Be careful not to damage the wiring on the board with too much heat.

Ream out the hole in the circuit board with a 0.031-inch drill. Remove the ferrule from the new interconnecting pin and press the new pin into the hole in the circuit board. Position the pin in the same manner as the old pin. Then, solder the pin on both sides of the circuit board. If the old pin was bent at an angle to mate with a connector, bend the new pin to match the associated pins.

The pin sockets on the circuit boards are soldered to the rear of the board. To replace one of these sockets, first unsolder the pin socket (use a vacuum-type desoldering tool to remove the excess solder). Then straighten the tabs on the socket and remove it from the hole in the board. Place the socket in the circuit board hole and press the tabs down against the board. Solder the tabs of the socket to the circuit board; be careful not to get solder into the socket.

NOTE

The spring tension of the pin sockets ensures a good connection between the circuit board and the pin. This spring tension can be destroyed by using the pin sockets as a connecting point for spring-loaded probe tips, alligator clips, etc.

End-Lead Pin Connectors. The pin connectors used to connect the wires to the interconnecting pins are clamped to the ends of the associated leads. To replace damaged end-lead pin connectors, remove the old pin connector from the end of the lead and clamp the replacement connector to the lead.

Some of the pin connectors are grouped together and mounted in a plastic holder; the overall result is that these connectors are removed and installed as a multi-pin connector. To provide correct orientation of this multi-pin connector when it is replaced, an arrow (or dot) is stamped on the circuit board and a matching arrow is molded into the plastic housing of the multi-pin connector. Be sure that these arrows are aligned when the multi-pin connector is replaced. If the individual end-lead pin connectors are removed from the plastic holder, note the color of the individual wires for replacement.

The color of the multi-pin connector holder corresponds to the last numeral of the circuit number, using the EIA color code (e.g., P1092 is red).

Cathode-Ray Tube Replacement. To replace the cathode-ray tube (crt), proceed as follows:

WARNING

Use care when handling a crt. Protective clothing and safety glasses should be worn. Avoid striking it with any object which might cause it to crack or implode. When storing a crt, place it in a protective carton or set it face down in a protected location on a smooth surface with a soft mat under the faceplate to protect it from scratches.

A. REMOVAL

1. Remove four screws from the rear of the shield covering the Low Voltage Regulator boards.

2. Remove the Low Voltage Regulator board as previously described. It is not necessary to completely remove the board or disconnect any multi-pin connectors.

3. Remove the crt pin socket from the rear of the crt.

4. Loosen the two screws, located on each side of the crt sockets, until the tension of the springs on these screws is released. Then, press in on the screws to be sure that the crt clamp is loose.

5. Remove the vertical and horizontal deflection plate leads (four total). Remove multi-pin connector P1480 from the Storage circuit board.

6. Remove the plastic frame from the front of the crt and remove the four screws securing the crt bezel.

http://manoman.sqhill.com

7. Remove the multi-pin connector from the camera-power connector on the crt bezel.

8. Remove the crt light filter, crt mask, crt bezel, and crt implosion shield.

9. Hold one hand on the crt faceplate and push forward on the crt base with the other. As the crt starts out of the shield, grasp it firmly. Guide the storage multi-pin connector (P1480) through the cutout in the crt shield as the crt is removed.

B. REPLACEMENT

1. Insert the crt into the shield. Guide the Storage multi-pin connector (P1480) through the hole in the crt shield.

2. Clean the crt faceplate, crt implosion shield, and crt light filter with denatured alcohol.

3. Reconnect the camera-power multi-pin connector to the crt bezel. Reinstall the crt implosion shield, crt bezel, crt mask, and crt light filter.

4. Push forward on the crt base to be certain that the crt is as far forward as possible. Then tighten the two screws on each side of the crt base until the springs on the screws are fully compressed.

5. Replace the crt base socket.

6. Re-install the Low Voltage Regulator board assembly and plastic shield.

7. Reconnect the storage multi-pin connector (P1480) to the storage board.

CAUTION

Do not bend deflection plate pin connectors on the crt. It could cause permanent damage to the crt.

8. Carefully reconnect the deflection plate connectors (four total). After each connector is installed, lightly pull on each lead to be sure that it will remain on the appropriate pin.

9. Check the 7313/R7313 calibration.

Switch Replacement. The push-button switches used in the 7313/R7313 are not repairable and should be replaced as a unit. To replace the VERT MODE or TRIG SOURCE switches, follow the procedure given under Calibrator Board Replacement. To replace the UPPER or LOWER Storage Switches, follow the procedure given under Storage Switch Board Replacement.

Graticule Bulb Replacement. To replace the graticule bulbs, remove the plastic frame from the front of the crt and remove the four screws securing the crt bezel. Remove light filter, crt mask, crt bezel, and implosion shield. Remove the appropriate graticule light assembly (upper or lower). Now, slide the lamp retaining strips to the side. Pull the bulb out of the Graticule Light circuit board. Reverse the order of removal for replacement.

Fuse Replacement. Table 3-2 gives the rating, location, and functions of the fuses in this instrument.

TABLE 3-2

Fuse Rating

Circuit Number	Rating	Location	Function
F813	1A Fast	Rectifier circuit board	−15 V unregulated
F814	1A Fast	Rectifier circuit board	+15 V unregulated
F855	0.3A (1/3A) Fast	Low Voltage Regulator circuit board	+130 V
F1000	3.2A (3 2/10A) Slow	Rear Panel	+110 V line
F1000	1.6A (1 6/10A) Slow	Rear Panel	+220 V line
F1161	0.06A (1/16A) Fast	Z Axis circuit board	−75 V
F1163	0.06A (1/16A) Fast	Z Axis circuit board	+250 V

Recalibration After Repair

After any electrical component has been replaced, the calibration of that particular circuit should be checked, as well as the calibration of other closely related circuits. Since the low-voltage supply affects all circuits, calibration of the entire instrument should be checked if work has been done in the low-voltage supply or if the power transformer has been replaced. The Performance Check procedure provides a quick and convenient means of checking instrument operation.

http://manoman.sqhill.com

Instrument Repackaging

If the 7313/R7313 is to be shipped for long distances, it is recommended that it be repackaged in the original manner for maximum protection. The original shipping carton can be saved and used for this purpose. The repackaging illustration in the Mechanical Parts List shows how to repackage the 7313/R7313. New shipping cartons can be obtained from Tektronix, Inc. Contact your Tektronix Field Office or representative.

http://manoman.sqhill.com

CALIBRATION

This calibration procedure can be used either for complete calibration of the 7313/R7313 or as an operation check of instrument performance. Completion of each step in the procedure ensures that the instrument is correctly adjusted and operating within all given tolerances. Refer to the following discussions for instructions on complete or partial calibration.

Calibration Interval

To ensure instrument accuracy, check the calibration of the 7313/R7313 every 1000 hours of operation, or every six months if used infrequently. Before complete calibration, thoroughly clean and inspect this instrument (refer to Maintenance Section).

Tektronix Field Service

Tektronix, Inc. provides complete instrument repair and recalibration at local Field Service Centers and the Factory Service Center. Contact your Tektronix Field Office or representative for further information.

Using This Procedure

This section provides several features to facilitate calibration of the 7313/R7313. These are:

Index. An index is given preceding the Calibration procedure to aid in locating steps.

Performance Check. The performance of this instrument can be checked by performing only the √ CHECK steps. The √ preceding a step indicates that performing this step checks the instrument against the tolerances listed as a Performance Requirement (see Specification section in 7313/R7313 Operators manual). Limits and tolerances given in other check steps are calibration guides and should not be interpreted as instrument specifications. Operator front-panel adjustments are adjusted as part of the Performance Check procedure.

Partial Calibration. A partial calibration is often desirable after replacing components, or to touch up the adjustment of a portion of the instrument between major recalibrations. To calibrate only part of the instrument, set the controls as given under Preliminary Control Settings and start with the nearest Equipment Required list preceding the desired portion. To prevent unnecessary recalibration of other parts of the instrument, readjust only if the tolerance given in the CHECK part of the step is not met. If re-adjustment is necessary, also check the calibration of any steps listed in the INTERACTION part of the step.

Complete Calibration Procedure. Completion of each step in the complete Calibration procedure ensures that this instrument is correctly adjusted and performing within all given tolerances.

NOTE

All waveforms shown in this section were taken with a Tektronix oscilloscope camera system, unless noted otherwise.

TEST EQUIPMENT REQUIRED

The test equipment and accessories given in Table 4-1, or its equivalent, are required for complete calibration of the 7313/R7313 Oscilloscope. Specifications given for the test equipment are the minimum necessary for accurate calibration. Therefore, the specifications of any test equipment used must meet or exceed the listed specifications. All test equipment is assumed to be correctly calibrated and operating within the listed specifications. Detailed operating instructions for the test equipment are not given in this procedure. Refer to the instruction manual for the test equipment if more information is needed.

Special Calibration Fixtures

Special Tektronix calibration fixtures are used in this procedure only where they facilitate instrument calibration. These special calibration fixtures are available from Tektronix, Inc. Order by part number through your Tektronix Field Office or representative.

Calibration Equipment Alternatives

All of the listed test equipment, or its equivalent, is required to completely check and adjust this instrument. The Calibration procedure is based on the first item of equipment given as an example of applicable equipment. When other equipment is substituted, control settings or calibration setup may be altered slightly to meet the requirements of the substitute equipment. If the exact item of test equipment given as an example in the Test Equipment list is not available, first check the Specifications column carefully to see if any other equipment is available which might suffice. Then check the

http://manoman.sghill.com

Usage column to see what this item of test equipment is used for. If used for a check or adjustment that is of little or no importance to your measurement requirements, the item and corresponding step(s) can be deleted.

Signal Connections

Detailed signal-connection information is not given in this procedure except when critical for a particular test. In general, the rear-panel output connectors should be connected to other equipment with 50-ohm BNC cables. The cable output should be terminated in 50 ohms; use a 50-ohm BNC termination if the other equipment has a high input impedance. Use a BNC T-connector to simultaneously connect a signal to two inputs. Signal-connection and termination information for the test equipment should be available in the associated instruction manual.

TABLE 4-1

Test Equipment

Description	Minimum Specifications	Usage	Examples of Applicable Test Equipment
1. Precision dc voltmeter	Range, −75 volts to +250 volts accuracy, within 0.1%.	Calibrator output accuracy check and adjustment. Low-voltage power supply adjustment.	a. Tektronix DM 501 Digital Multimeter.[1] b. Fluke Model 825A Differential DC Voltmeter.
2. Dc voltmeter (vom)	Range, zero to 4000 volts; accuracy, checked to within 1% at −3960 volts.	High-voltage power supply check. Z-axis dc levels adjustment. Storage and non-storage level adjustment.	a. Triplett Model 630-NA. b. Simpson Model 262.
3. Time-mark generator	Marker outputs, one millisecond, 0.1 millisecond and 50 nanoseconds; marker accuracy, within 0.1%. Trigger output, one millisecond.	Crt geometry check and adjustment. Horizontal timing check and adjustment.	a. Tektronix TG 501 Time-Mark Generator.[1] b. Tektronix 2901 Time-Mark Generator.[1]
4. Medium-frequency constant-amplitude signal generator	Frequency, 3 to 30 megahertz; reference frequency, 50 kilohertz; output amplitude, variable from 50 millivolts to five volts peak-to-peak into 50 ohms; amplitude accuracy, constant within 3% of reference as output frequency changes.	External Z-axis operation check. Vertical bandwidth check. Vertical amplifier isolation check. Horizontal bandwidth check.	a. Tektronix SG 503 Signal Generator.[1] b. Tektronix 191 Constant Amplitude Signal Generator. c. General Radio 1215-C with 1263-C Amplitude Regulating Power Supply.
5. Low-frequency signal generator	Frequency, 35 kilohertz; output amplitude, variable from 50 to 200 millivolts.	X-Y phase shift check.	a. Tektronix FG 501 Function Generator.[1] b. General Radio 1310-B Oscillator with General Radio Type 274 QBJ Adapter to provide BNC output.

[1] **Requires TM 500-Series Power Module.**

http://manoman.sqhill.com

TABLE 4-1 (cont)

Description	Minimum Specifications	Usage	Examples of Applicable Test Equipment
6. Test-oscilloscope system (dual trace)	Bandwidth, dc to 25 megahertz; minimum deflection factor, 10 millivolts/division; accuracy within 3%.	Horizontal limit centering adjustment and + Gate Out check.	a. Tektronix 7603 or 7313 Oscilloscope with two 7A15A or 7A16 Amplifier units and 7B50 or 7B53A/N time-base units, and two P6053B Probes. Amplifier units and probes may be shared with 7313/R7313 system. b. Tektronix 465 Oscilloscope with two P6065 Probes. c. Refer to the Tektronix Products catalog for compatible oscilloscope system.
7. Amplifier plug-in unit (two required), one single trace and one dual trace	Tektronix 7A-series, 25 megahertz bandwidth required for complete procedure.	Used throughout procedure to provide vertical input to the 7313/R7313 under calibration. Two amplifier units required for X-Y phase shift check, vertical signal out check, and vertical mode check. Amplifier units may be shared with test oscilloscope system. The dual-trace amplifier is used to check readout operation.	a. Tektronix 7A15A and a 7A18 Amplifier. b. Any 7A-series plug-in unit, with 25 megahertz capabilities.
8. Time base plug-in unit	Tektronix 7B-series. Dual time-base unit required for + Gate Out check and storage operation check.	Used throughout procedure to provide sweep.	a. Tektronix 7B53A or 7B53AN (non-readout operation) Time Base. b. Any 7B-series plug-in unit.
9. Signal Standardizer Calibration Fixture	Produces gain-check and pulse response waveforms.	Used throughout procedure to standardize instrument so plug-in units can be interchanged without complete recalibration.	a. Tektronix Calibration Fixture 067-0587-01. b. Calibrated 7000-series plug-in units with suitable signal sources may be substituted if lower performance is acceptable.
10. 10X passive probe	Compatible with 7B-series external trigger input.	Z-axis transient response check and adjustment.	a. Tektronix P6053B or P6054 Probe (may be shared with test oscilloscope).

http://manoman.sqhill.com

TABLE 4-1 (cont)

Description	Minimum Specifications	Usage	Examples of Applicable Test Equipment
11. T-connector	Connectors, BNC.	External z-axis operation check.	a. Tektronix Part No. 103-0030-00.
12. Termination	Impedance, 50 ohms; accuracy, ±2%; connectors, BNC.	Used throughout procedure to provide 50-ohm termination at amplifier unit input.	a. Tektronix Part No. 011-0049-01.
13. Dual-input coupler	Connectors, BNC.	Added operation check. X-Y phase shift check.	a. Tektronix Calibration Fixture 067-0525-00.
14. Cable (two required)	Impedance, 50 ohms; type RG-58/U; length, 42 inches; connectors, BNC.	Used throughout procedure for signal interconnection.	a. Tektronix Part No. 012-0057-01.
15. Cable, BNC-to-pin-jack	Adapts pin jacks to BNC male connector.	Added operation check. Trigger source operation check. Astigmatism and Focus Preset adjustment. Calibrator repetition rate check. Vertical signal out check. Storage system check and adjustment.	a. Tektronix Part No. 175-1178-00 (one supplied as standard accessory).
16. Adapter	Connectors, GR874 to BNC female.	Vertical amplifier bandwidth check. Vertical amplifier isolation check. Horizontal amplifier bandwidth check.	a. Tektronix Part No. 017-0063-00.
17. Screwdriver	Three-inch shaft, 3/32-inch bit.	Used throughout adjustment procedure to adjust variable resistors.	a. Xcelite R-3323.
18. Low-capacitance screwdriver	1 1/2-inch shaft.	Used throughout adjustment procedure to adjust variable capacitors.	a. Tektronix Part No. 003-0000-00.

http://manoman.sqhill.com

CALIBRATION PROCEDURE

7313/R7313 Serial No. _____

Calibration Date _____

Calibrated By _____

The following procedure returns the 7313/R7313 to correct calibration. All limits and tolerances given in this procedure are calibration guides, and should not be interpreted as instrument specifications except as listed as a Performance Requirement in the Specification section of the Operators manual.

Index To Calibration Procedure

POWER SUPPLY. Page

1. Check/Adjust −50 Volt Power Supply (R881) Page 4-7
2. Check Remaining Power-Supply Voltages Page 4-7
3. Check High-Voltage Power Supply Page 4-7

DISPLAY AND Z-AXIS.

4. Check/Adjust Z-Axis DC Level (R1261) Page 4-8
5. Check/Adjust Astigmatism and Focus Preset (R1193, R1250) Page 4-8
6. Check/Adjust Trace Rotation (R1181) Page 4-9
7. Check/Adjust Geometry (R1184, R1485) Page 4-9
8. Check/Adjust Z-Axis Transient Response (C1158) Page 4-9
9. Check Beam Finder Page 4-9

VERTICAL DEFLECTION SYSTEM.

10. Check/Adjust Vertical Centering (R427) Page 4-11
11. Adjust Vertical Amplifier Gain (R458) Page 4-11
12. Check Low-Frequency Linearity Page 4-11
13. Adjust Vertical High Frequency Compensation (C405, R405, C469, L472 and L482) Page 4-12
14. Check Vertical Amplifier Bandwidth Page 4-12
15. Check Vertical Amplifier Isolation Page 4-12
16. Check Add Operation Page 4-13
17. Check Alternate and Chopped Operation Page 4-13

TRIGGERING SYSTEM.

18. Check Trigger Source Operation Page 4-14

HORIZONTAL DEFLECTION SYSTEM.

19. Check/Adjust Horizontal Amplifier Gain and Low-Frequency Linearity (R512) Page 4-15
20. Check/Adjust Horizontal Amplifier Centering (R525) Page 4-15
21. Check/Adjust Horizontal Amplifier Limit Centering (R538) Page 4-16
22. Check/Adjust High Frequency Timing (C549, C569) Page 4-16
23. Check X-Y Phase Shift Page 4-17

CALIBRATOR AND SIGNALS IN/OUT.

24. Check/Adjust Calibrator Output Voltage (R1077) Page 4-18
25. Check Calibrator Repetition Rate Page 4-18
26. Check Ext SS Reset In Page 4-18
27. Check Ext Z-Axis In Page 4-18
28. Check Vert Signal Out Page 4-19
29. Check + Sawtooth Out Page 4-19
30. Check + Gate Out Page 4-19

READOUT SYSTEM.

31. Check/Adjust Readout Operation (R2128, R2183, R2214, R2273, and R2291) Page 4-21
32. Check Readout Gate Triggered Operation Page 4-21

STORAGE SYSTEM.

33. Check Storage Operation Page 4-22
34. Check Stored Writing Speed Page 4-23

http://manoman.sqhill.com

	Page
35. Adjust Collimation (R1472)	Page 4-24
36. Adjust Storage and Non-Storage Levels (R1387, R1437, R1386, R1436)	Page 4-24
37. Check Remote Erase In Operation	Page 4-25

Setup Procedure

NOTE

This instrument should be adjusted at an ambient temperature of +25°C ±5°C for best overall accuracy.

1. Remove the sides and bottom covers from the 7313 or the top cover and side panel from the R7313.

2. Connect the instrument to a power source which meets the voltage and frequency requirements. The applied voltage should be near the center of the voltage range marked on the rear panel (see Section 1 for information on converting this instrument from one operating voltage to another).

NOTE

If correct line voltage is not available, use a variable autotransformer to provide the correct input voltage.

3. Set the controls as given under Preliminary Control Settings. Allow at least 20 minutes warmup before proceeding.

NOTE

Titles for external controls of this instrument are capitalized in this procedure (e.g., INTENSITY). Internal adjustments are initial capitalized only (e.g., Trace Rotation).

Preliminary Control Settings

Set the 7313/R7313 controls as follows:

INTENSITY	Midrange
FOCUS	Adjust for well-defined display
READOUT	As desired
GRATICULE	As desired
VERT MODE	LEFT
TRIG SOURCE	VERT MODE
POWER	ON
STORE (Upper and lower)	OUT (off)
ENHANCE (Upper and lower)	OUT (Off)
AUTO ERASE (Upper and lower)	OUT (Off)

http://manoman.sqhill.com

POWER SUPPLY

Equipment Required

1. Precision dc voltmeter
2. Dc voltmeter (vom)
3. Three-inch screwdriver

Before you begin, see **ADJUSTMENT LOCATIONS 1** *in the Diagrams section.*

Control Settings

Set the controls as given under Preliminary Control Settings at the beginning of this section.

1. Check/Adjust –50 Volts Power Supply (R881)

a. Set the INTENSITY control fully counterclockwise.

b. Connect the precision dc voltmeter between –50 V and chassis ground (see Fig. 7-18).

c. CHECK—Meter reading; –50 volts ±0.1 volt.

d. ADJUST– –50 volts adjustment R881 for a meter reading of exactly –50 volts (see Fig. 7-18).

e. INTERACTION—Change in setting of R881 may affect operation of all circuits within the 7313/R7313.

2. Check Remaining Power-Supply Voltages

a. CHECK—Table 4-2 lists the low-voltage power supplies in this instrument. Check each supply with the precision dc voltmeter for output voltage within the given tolerance (connect meter ground lead to chassis ground). (See Fig. 7-19 for power supply test points.)

b. Disconnect the precision dc voltmeter.

TABLE 4-2

Power Supply Tolerance

Power Supply	Test Point	Output Voltage Tolerance
–50 volt	TP50 or Pin 8 P1171	±0.1 volt
–15 volt	Pin 8 P1170	±0.3 volt
+5 volt	Pin 6 P1170	±0.15 volt
+15 volt	Pin 5 P1170	±0.3 volt
+50 volt	Pin 3 P1172	±0.6 volt
+130 volt	Pin 4 P1170	±5.2 volts
–75 volt	Pin 7 P1172	±2.25 volts
+250 volt	Pin 1 P1172	±7.5 volts

3. Check High-Voltage Power Supply

a. Turn off instrument.

b. Set the dc voltmeter (vom) to measure at least 4050 volts. Then, connect it between the high-voltage test point and chassis ground (see Fig. 7-20).

c. Turn on instrument. Check meter reading; –3960 volts ±79 volts.

d. Turn off instrument. Disconnect the dc voltmeter.

e. Turn on instrument.

http://manoman.sqhill.com

DISPLAY AND Z-AXIS

Equipment Required

1. Signal Standardizer Calibration Fixture
2. Time-base unit
3. Dc voltmeter (vom)
4. Amplifier unit
5. Time-mark generator
6. BNC-to-pin-jack cable
7. 10X Probe
8. 42-inch 50-ohm BNC cable (two)
9. 50-ohm GR in-line termination
10. Three-inch insulated screwdriver
11. Low-capacitance screwdriver

Before you begin, see **ADJUSTMENT LOCATIONS 2** *in the Diagrams section.*

Control Settings

Set the control settings as given under Preliminary Control Settings at the beginning of this section.

4. Check/Adjust Z-Axis DC Level (R1261, CRT Grid Bias)

a. Install the time-base unit in the Horizontal compartment.

b. Set the INTENSITY control fully counterclockwise.

c. Set the time-base unit for the amplifier mode.

d. Connect the dc voltmeter (vom) between the Z-Axis test point TP1157 (see Fig. 7-22) and chassis ground. Note the voltmeter reading.

e. Adjust the INTENSITY control for a meter reading four volts more positive than the reading in part d.

f. Adjust—Crt Grid Bias adjustment, R1261 (see Fig. 7-21), so the dot c the crt is just extinguished.

g. Disconnect the voltmeter and set the INTENSITY control to a normal viewing level.

√5. Check/Adjust Astigmatism and Focus Preset (R1193, R1250)

a. Set the time-base unit triggering for the auto mode and internal source. Select a sweep rate of one millisecond/division.

b. Install the Signal Standardizer Calibration Fixture in the Left Vertical compartment and set the Test switch to Vert or Horiz Aux In.

c. Connect the 4 V 1 kHz signal from the oscilloscope CALIBRATOR to the calibration fixture Aux In connector. Set the calibration fixture for a two-division display centered on the crt. Adjust time-base unit triggering level control for a stable display.

√ d. CHECK—Crt for well-defined display.

WARNING

The Focus Preset adjustment R1250 is in the proximity of the High Voltage Test Point. Use an insulated screwdriver.

e. ADJUST—Set the INTENSITY control for visible display (approximately one third turn clockwise) and set the front-panel FOCUS control to midrange. Adjust Focus Preset, R1250, and Astigmatism, R1193, for best display definition. See Fig. 7-21 for location of R1250 and Fig. 7-22 for location of R1193.

f. Remove signal connection.

http://manoman.sqhill.com

√ 6. Check/Adjust Trace Rotation (R1181)

a. Set the INTENSITY control to midrange.

b. Position the trace to the center horizontal graticule line.

√ c. CHECK—Trace aligns with the center horizontal line within 0.1 division.

d. ADJUST—Trace Rotation adjustment R1181 to align the trace with the center horizontal line (see Fig. 7-22).

7. Check/Adjust Geometry (R1184, R1485)

a. Connect the marker output of the time-mark generator to the Aux In connector of the calibration fixture and connect the trigger output to the external trigger input of the time-base unit.

b. Set the time-mark generator for one millisecond markers and one millisecond triggers.

c. Set the calibration fixture Test switch to Vert Or Horiz Aux In and the Amplitude for maximum gain (fully clockwise). Position the display as necessary.

d. Set the time-base triggering for auto mode and external source. Set the time-base unit for a sweep rate of one millisecond/division. Adjust the triggering controls for a stable display.

e. Set the time-mark generator for one millisecond and 0.1 millisecond markers.

f. Position the display so the time markers extend above and below the extreme limits of the graticule.

g. CHECK—Vertical bowing and tilt of the marker display is less than 0.1 division (each 0.1 millisecond marker represents 0.1 division). It may be helpful to use an oscilloscope veiwing hood to view display.

h. ADJUST—Geometry R1184 for minimum bowing of time markers (see Fig. 7-22). Adjustment may have to be compromised to obtain less than 0.1 division bowing and tilt everywhere within the graticule area.

i. ADJUST—If R1184 cannot be adjusted for bowing and tilt of time-marker of less than 0.1 division, adjust Geometry No. 2, R1485 for minimum bowing and tilt (see Fig. 7-23).

j. INTERACTION—Readjust R1184 and R1485 as necessary.

k. Remove all signal connections.

8. Check/Adjust Z-Axis Transient Response (C1158)

a. Remove the calibration fixture unit from the 7313/R7313 and install an amplifier unit.

b. Connect the 10X probe to the input of the amplifier unit. Check the probe compensation.

c. Set the time-base unit for a sweep rate of one microsecond/division with the X10 magnifier on.

d. Connect the probe tip to TP1157 (see Fig. 7-22).

e. Set the amplifier unit for a deflection factor of one volt/division (10 volts/division with 10X probe).

f. ADJUST—The INTENSITY control for three divisions of vertical deflection on the crt. Position the display so the positive leading edge of the waveform is displayed.

g. ADJUST—Z-Axis Comp, C1158, for optimum square positive leading corner (see Fig. 7-22). Use a low-capacitance screwdriver to adjust C1158.

h. Disconnect 10X probe from amplifier unit and TP1157.

√ 9. Check Beam Finder

a. Connect the 4 V, 1 kHz CALIBRATOR signal to the amplifier unit input. Set the time-base unit for a stable display.

b. Set the amplifier unit deflection factor to 0.2 volts/division. Note that the display exceeds the viewing area.

http://manoman.sqhill.com

c. Press the BEAM FINDER switch.

√d. CHECK—Display compressed within graticule area.

e. Increase the deflection factor until the compressed display is reduced in amplitude.

f. Release the BEAM FINDER switch.

√ g. CHECK—Display remains within graticule area.

h. Disconnect all test equipment and remove the plug-in units.

http://manoman.sqhill.com

VERTICAL DEFLECTION SYSTEM

Equipment Required

1. Signal Standardizer Calibration Fixture
2. Time-base unit
3. Medium-frequency generator
4. Amplifier unit (two)
5. 50-ohm BNC cable (42-inch)
6. Adapter, GR-to-BNC Female
7. 50-ohm GR in-line termination
8. BNC-to-pin-jack cable
9. Dual-input coupler
10. Three-inch screwdriver
11. Low-capacitance screwdriver

Before you begin, see **ADJUSTMENT LOCATIONS 3** *in the Diagrams section.*

Control Settings

Set the controls as given under Preliminary Control settings at the beginning of this section.

10. Check/Adjust Vertical Centering (R427)

a. Install the time-base unit in the Horizontal compartment.

b. Set the time-base unit triggering for auto mode and internal source. Select a sweep rate of one millisecond/division.

c. CHECK—The trace should be within 0.3 division of vertical center.

d. ADJUST—Vertical Centering, R427, to position the trace to the center horizontal graticule line (see Fig. 7-24).

√ 11. Adjust Vertical Amplifier Gain (R458)

a. Install the Signal Standardizer Calibration Fixture in the Left Vertical compartment.

b. Set the calibration fixture Test switch to Vert Or Horiz Gain with the Rep Rate switch set to 100 kHz.

c. Position the display to align the bright center trace with the center horizontal line of the graticule.

√ d. CHECK—Deflection between the second and eighth traces should be six divisions ±0.06 division.

e. ADJUST—Vertical Gain, R458, for exactly six divisions of deflection between the second and eighth traces (see Fig. 7-24).

f. Remove the calibration fixture from the Left Vertical compartment and install it in the Right Vertical compartment.

g. Set the VERT MODE switch to RIGHT.

√h. CHECK—Deflection between the second and eighth traces should be six divisions ±0.06 division.

i. ADJUST—If necessary, compromise the setting of R458 for optimum gain for both vertical compartments. If readjustment is necessary, recheck parts a through i.

√12. Check Low Frequency Linearity

a. Set the Signal Standardizer Calibration Fixture Test switch to Vert Or Horiz +Step Resp with the Rep Rate switch set to 1 kHz.

b. Set the calibration fixture Amplitude and Position controls so the display is exactly two divisions in amplitude in the center of the graticule area.

√ c. CHECK—Position the two-division display vertically and check for not more than 0.1 division of compression or expansion anywhere within the graticule area.

http://manoman.sqhill.com

13. Adjust Vertical High Frequency Compensation (C405, R405, C469, L472 and L482)

a. Set the calibration fixture Test switch to Vert Or Horiz +Step Resp, Rep Rate switch to 100 kHz, and adjust the Amplitude control for a six-division display.

b. Set the time-base unit for a calibrated sweep rate of .05 microsecond/division. Set the trigger source to internal and adjust the trigger level for a stable display. Center the display on the graticule.

c. Check for optimum square corner and flat top on displayed pulse with total peak-to-peak aberrations (within 100 nanoseconds of step) not to exceed 0.2 division.

d. ADJUST—High-frequency compensation as given in Table 4-3 for optimum square leading corner and flat top with minimum aberrations within the limits given in part c. Use a low-capacitance screwdriver. See Fig. 7-24 and Fig. 7-25 for location of adjustments. While switching the calibration fixture Vert Or Horiz Test switch from + or — Step Resp, repeat the complete adjustment procedure several times to obtain optimum compensation. Center the display on the graticule each time the polarity is switched.

TABLE 4-3

High Frequency Compensation

Adjustment	Primary Area of Pulse Affected	Test Sweep Rate
C405	First 50 nanoseconds	.05 μs
R405	First 50 nanoseconds	.05 μs
C469	Leading edge of pulse	.05 μs (X10 MAG)
L472	First 40 nanoseconds	.05 μs
L482	First 40 nanoseconds	.05 μs

e. Remove the calibration fixture from the Right Vertical compartment and install it in the Left Vertical compartment.

f. Set the VERT MODE switch to LEFT.

g. CHECK—Optimum square leading corner and flat top on the displayed pulse with total peak-to-peak aberrations not to exceed 0.2 division within 100 nanoseconds of step.

h. ADJUST—If necessary, compromise the adjustment of C405, R405, C469, L472 and L485 for best response from both the Left and Right Vertical compartments.

i. To verify correct high-frequency compensation, perform the bandwidth check as given in next step.

√14. Check Vertical Amplifier Bandwidth

a. Connect the medium-frequency constant-amplitude signal generator to the CW In connector of the Signal Standardizer Calibration Fixture.

b. Set the Test switch of the calibration fixture to Vert Or Horiz Freq Resp.

c. Set the time-base unit for a free-running display at a sweep rate of 0.2 microseconds/division.

d. Set the medium-frequency constant-amplitude signal generator for six divisions of deflection, centered on the graticule, at three megahertz.

e. Without changing the output amplitude, increase the output frequency of the medium-frequency generator until the display is reduced to 4.2 divisions (—3 dB point).

√ f. CHECK—Output frequency must be 25 megahertz or greater.

g. Remove the Signal Standardizer Calibration Fixture from the Left Vertical compartment (leave signal connected) and install it in the Right Vertical compartment.

h. Set the VERT MODE switch to RIGHT.

√ i. Repeat parts d through f.

j. Remove signal connection.

√15. Check Vertical Amplifier Isolation

a. Remove the Signal Standardizer Calibration Fixture from the Right Vertical compartment and install the amplifier unit in the Left Vertical compartment.

b. Set the amplifier unit for a deflection factor of 0.1 volt/division.

c. Connect the output of the medium-frequency generator to the input of the amplifier unit.

http://manoman.sqhill.com

d. Set the medium-frequency generator for eight divisions of deflection at 25 megahertz.

e. Set the VERT MODE switch to RIGHT.

√ f. CHECK—Crt display for not more than 0.08 division of 25 megahertz signal (channel isolation at least 100:1).

g. Remove the amplifier unit from the Left Vertical compartment and install it in the Right Vertical compartment (leave signal connected).

h. Set the high-frequency generator for eight divisions of deflection at 25 megahertz.

i. Set the VERT MODE switch to LEFT.

√ j. CHECK—Crt display for not more than 0.08 division of 25 megahertz signal.

k. Remove signal connection.

√ 16. Check Add Operation

a. Install the other amplifier unit in the Left Vertical compartment.

b. Set both amplifier units for a deflection factor of 0.2 volt/division.

c. Connect the 0.4 V CALIBRATOR signal to the inputs of the amplifier units with the BNC-to-pin-jack cable and dual-input coupler.

d. Set the time-base unit triggering for the auto mode and internal source. Select a sweep rate of 0.5 milliseconds/division.

e. Center the display with the Left Amplifier unit position control and note the vertical deflection.

f. Set the VERT MODE switch to RIGHT.

g. Center the display with the Right Amplifier unit position control and note the vertical defelction.

h. Set the VERT MODE switch to ADD.

√ i. CHECK—Crt display; vertical deflection should approximately equal the algebraic sum of the deflection noted in parts e and g of this step.

j. Disconnect the BNC-to-pin-jack cable and dual-input coupler.

√17. Check Alternate And Chopped Operation

a. Set the VERT MODE switch to ALT.

b. Position the traces about two divisions apart.

c. Turn the time-base unit time/division switch throughout its range.

√ d. CHECK—Trace alternation between the left and right amplifier units at all sweep rates. At faster sweep rates, alternation will not be apparent; instead, display appears as two traces on the screen.

e. Set the VERT MODE switch to CHOP.

√ f. CHECK—For a two trace display.

g. Remove all plug-in units.

http://manoman.sqhill.com

TRIGGERING SYSTEM

Equipment Required

1. Signal Standardizer Calibration Fixture
2. Time-base plug-in unit
3. Amplifier plug-in unit
4. BNC-to-pin-jack cable

Control Settings

Set the controls as given under Preliminary Control Settings at the beginning of this section.

√18. Check Trigger Source Operation

a. Install the Signal Standardizer Calibration Fixture in the Right Vertical compartment and the amplifier unit in the Left Vertical compartment.

b. Install the time-base unit in the Horizontal compartment.

c. Set the time-base unit triggering for auto mode and internal source. Select a sweep rate of 0.5 millisecond/division.

d. Set the amplifier unit for a deflection factor of 0.2 volt/division.

e. Connect the 0.4 V CALIBRATOR pin jack to the input of the amplifier unit with the BNC-to-pin-jack cable.

f. Position the CALIBRATOR waveform display to the upper half of the graticule area with the amplifier unit position control.

g. Set the VERT MODE switch to RIGHT.

h. Set the calibration fixture Test switch to Vert Or Horiz +Step Resp, Rep Rate switch to 100 kHz, and adjust the Amplitude control for a two-division display. Position the display in the lower half of the graticule area.

i. Set the VERT MODE switch to ALT.

√ j. CHECK—Crt display; both square-wave displays are stable.

k. Set the TRIG SOURCE switch to LEFT.

√ l. CHECK—Crt display; CALIBRATOR display only is stable.

m. Set the TRIG SOURCE switch to RIGHT.

√ n. CHECK—Crt display; calibration fixture display only is stable.

o. Disconnect the BNC-to-pin-jack cable and remove the plug-in units.

http://manoman.sqhill.com

HORIZONTAL DEFLECTION SYSTEM

Equipment Required

1. Time-base unit
2. Amplifier unit (two)
3. Signal Standardizer Calibration Fixture
4. Test-oscilloscope system with two 10X probes
5. Time-mark generator
6. Low-frequency generator
7. Medium-frequency generator
8. Dual-input coupler
9. Adapter, GR-to-BNC Female
10. 50-ohm GR in-line termination
11. 42-inch 50-ohm BNC cable
12. 50-ohm BNC termination
13. Three-inch screwdriver
14. Low-capacitance screwdriver

Before you begin, see **ADJUSTMENT LOCATIONS 4** *in the Diagrams section.*

Control Settings

Set the controls as given under Preliminary Control Settings at the beginning of this section.

√19. Check/Adjust Horizontal Amplifier Gain And Low-Frequency Linearity (R512)

a. Install the Signal Standardizer Calibration Fixture in the Horizontal compartment and the time-base unit in the Left Vertical compartment.

b. Set the calibration fixture test switch to Vert Or Horiz Gain and the Rep Rate to 100 kHz.

c. Set the time-base unit triggering for the auto mode and internal source. Select a sweep rate of one millisecond/division.

d. Position the display to align the bright center trace with the center vertical line of the graticule.

√ e. CHECK—Deflection between the second and tenth traces is eight divisions ±0.08 division.

f. ADJUST—Horizontal Gain, R512, for exactly eight divisions of deflection between the second and tenth traces (see Fig. 7-26).

g. CHECK—With gain set exactly, all eleven traces must align with their respective graticule lines within 0.05 division.

h. Set the calibration fixture Test switch to Vert Or Horiz +Step Resp.

i. Adjust the calibration fixture Amplitude and Position controls for two divisions of horizontal display centered on the vertical graticule line.

√ j. CHECK—Position the display throughout the graticule area and check for no more than 0.1 division compression or expansion.

k. INTERACTION—If R512 is adjusted, check step 22.

20. Check/Adjust Horizontal Amplifier Centering (R525)

a. Set the Test switch on the calibration fixture to Triggering Gain.

b. CHECK—Vertical trace produced by the time-base unit should align with the vertical center line of the graticule within 0.3 division.

http://manoman.sqhill.com

c. ADJUST—Horizontal Centering, R525, to position the trace to the vertical center line (see Fig. 7-26).

21. Check/Adjust Horizontal Amplifier Limit Centering (R538)

a. Remove the Mainframe Standardizer Calibration Fixture and time-base unit. Install the time-base unit in the Horizontal compartment.

b. Set the time-base unit triggering for auto mode and internal source. Select a sweep rate of one-millisecond/division and set the mag switch to X10.

c. Connect 10X probes to both inputs of the test oscilloscope. Connect the probe tips to the horizontal deflection plate connectors of the 7313/R7313 (see Fig. 7-27). Be sure that the probes are compensated.

d. Set both channels of the test oscilloscope for a vertical deflection factor of 2 volts/division (20 volts/division with 10X probes) in the chop dual-trace mode with the input coupling set to ground.

e. Position the ground-reference traces displayed on the test oscilloscope to the bottom horizontal line of the graticule. Do not change the test oscilloscope position controls after establishing this ground reference.

f. Set the test oscilloscope for dc input coupling and set the triggering controls so the test oscilloscope is triggered from the signal on channel one only. Set the triggering controls for a stable display at a sweep rate of five milliseconds/division.

g. CHECK—The base line of both displayed waveforms should be at the same dc level within 0.2 division.

h. ADJUST—Limit Centering adjustment R538 to match the dc levels of both waveforms (see Fig. 7-26).

i. INTERACTION—If R538 is adjusted, recheck step 20.

j. Disconnect all test equipment (leave time-base unit installed).

√ 22. Check/Adjust High Frequency Timing (C549, C569)

a. Install the amplifier unit in the Left Vertical compartment.

b. Connect the time-mark generator to the input of the amplifier unit.

c. Set the time-mark generator for one-millisecond markers. Set the deflection factor of the amplifier unit so the markers are at least two divisions in amplitude. Position the display to crt center.

d. Set the time-base unit triggering for the auto mode and internal source. Select a sweep rate of one-millisecond/division (X1 Mag). Adjust the triggering level control for a stable display.

e. Position the first marker to the left vertical line of the graticule.

f. Set the time-base unit sweep calibration adjustment for one marker each major graticule division over the center eight divisions.

g. Set the time-mark generator for 50 nanoseconds markers.

h. Set the time-base unit for a sweep rate of 0.2 microseconds/division and X10 magnification. Set the deflection factor of the amplifier unit for two divisions of time markers.

√ i. CHECK—Crt display for one marker each 2.5 divisions over the center eight divisions of the graticule. Refer to the calibration procedure in the appropriate time-base manual for timing limits (20 nanoseconds/division).

j. Adjust—C549 and C569 for one marker each 2.5 divisions over the center eight divisions of the graticule (see Fig. 7-26).

k. Disconnect all test equipment (leave plug-in units installed).

http://manoman.sqhill.com

√ 23. Check X-Y Phase Shift

a. Remove the time-base unit and install an amplifier unit in the Horizontal compartment.

b. Set both amplifier units for a deflection factor of 20 millivolts/division with dc input coupling.

c. Connect the low-frequency signal generator to the inputs of both amplifier units.

d. Set the low-frequency generator for eight divisions of vertical and horizontal deflection at an output frequency of 35 kilohertz.

√ e. CHECK—Crt lissajous display for an opening at the center vertical line of 0.28 division or less (indicates 2° or less phase shift, see Fig. 4-1).

f. Disconnect all test equipment and remove plug-in units.

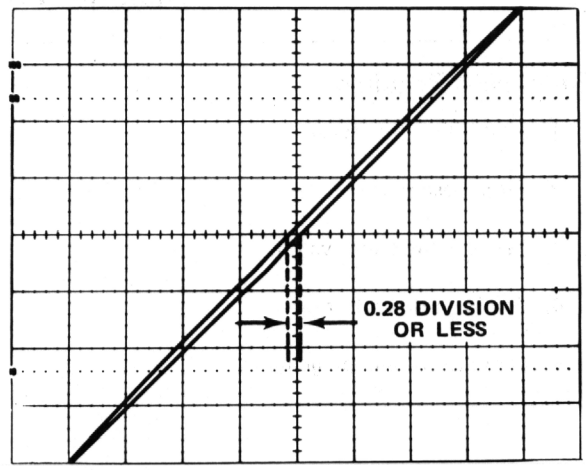

Fig. 4-1. Typical crt display when checking X-Y phase shift.

http://manoman.sqhill.com

CALIBRATOR AND SIGNALS IN/OUT

Equipment Required

1. Amplifier unit (two)
2. Time-base unit
3. Test-oscilloscope system
4. Precision dc voltmeter
5. Medium-frequency generator
6. 50-ohm BNC cable (two)
7. 50-ohm BNC termination
8. BNC T-connector
9. BNC-to-pin-jack cable
10. Three-inch screwdriver

Before you begin, see **ADJUSTMENT LOCATIONS 4** *in the Diagrams section.*

Control Settings

Set the controls as given under Preliminary Control Settings at the beginning of this section.

√24. Check/Adjust Calibrator Output Voltage (R1077)

a. Change Multi-Pin connector P1066 to the dc position (see Fig. 7-28).

b. Connect the precision dc voltmeter between the 4 V and GND pin jacks.

√ c. CHECK—Meter reading; 4 volts ±0.04 volt (within ±0.08 volt if this instrument is operating outside the +15°C to +35°C range).

d. ADJUST—4 Volts adjustment R1077 (see Fig. 7-28) for a meter reading of exactly 4 volts.

√25. Check Calibrator Repetition Rate

a. Change jumper P1066 to the 1 kilohertz position (see Fig. 7-28).

b. Install the amplifier unit in the Left Vertical compartment and the time-base unit in the Horizontal compartment.

c. Set the amplifier unit for a deflection factor of one volt/division.

d. Set the time-base unit triggering for auto mode and internal source. Select a sweep rate of 0.5 millisecond/division.

e. Connect the 4 V CALIBRATOR pin jack to the input of the amplifier with the BNC-to-pin-jack cable.

√f. CHECK—Crt display for one complete cycle in two divisions ±0.4 division (position as necessary).

g. Disconnect the CALIBRATOR signal.

√26. Check Ext SS Reset In

a. Set the time-base unit to the single sweep mode.

√ b. CHECK—Ground the EXT SS RESET IN and check that the time-base unit reset lamp is illuminated.

√27. Check Ext Z Axis In

a. Connect the output of the medium-frequency generator to the amplifier unit input with a 50-ohm BNC cable, 50-ohm termination and T-connector.

b. Set the amplifier unit for a deflection factor of one volt/division.

c. Set the time-base unit triggering for the auto mode and internal source. Select a sweep rate of 10 microseconds/division.

http://manoman.sqhill.com

d. Set the medium-frequency generator for a two-division display at 50 kilohertz.

e. Connect the output of the T-Connector (at amplifier input) to the EXT Z-AXIS IN connector.

√ f. CHECK—Top portion of displayed waveform is blanked out.

g. Disconnect the 50-kilohertz signal.

√28. Check Vert Signal Out

a. Install an amplifier unit in the Right Vertical compartment.

b. Connect the 0.4 V CALIBRATOR signal to the input of the amplifier unit in the Left Vertical compartment. Connect a 50-ohm cable from the VERT SIG OUT connector (rear panel) directly to the input of the amplifier unit in the Right Vertical compartment.

c. Set both amplifier units for a deflection factor of 0.2 volts/division. Set the TRIG SOURCE switch to LEFT.

d. Set the time-base unit for a stable display of the Left Vertical unit at one millisecond/division.

e. Check that a two-division signal is displayed by the Left Vertical amplifier unit.

√ f. CHECK—Set VERT Mode switch to RIGHT and check that a signal of about five divisions is displayed by the Right Vertical amplifier.

g. Interchange the connections to the vertical amplifiers. Set the TRIG SOURCE switch to RIGHT.

h. Check that a two division signal is displayed by the Right Vertical amplifier.

√i. CHECK—Set the VERT MODE switch to LEFT and check that a signal of five divisions is displayed.

j. Install a 50-ohm termination between the cable and the input of the Left Vertical amplifier.

√ k. CHECK—Set the deflection factor of the Left Vertical unit to 10 mV/division. Check for a display of about five divisions.

l. Disconnect all cables.

√29. Check + Sawtooth Out

a. Connect the + SAWTOOTH OUT signal directly to the input of the amplifier unit in the Left Vertical compartment.

b. Set the deflection of the Left Vertical amplifier for two volts/division.

√ c. CHECK—For a sawtooth display of five divisions in amplitude (±0.5 division) and greater than 10 divisions in length. Position as necessary.

d. Install a 50-ohm termination between the cable and the input of the amplifier in the Left Vertical compartment.

e. Set the amplifier unit (in Left Vertical compartment) for a deflection factor of 0.1 volt/division.

√ f. CHECK—For a sawtooth display of five divisions in amplitude (±0.75 division) and greater than 10 divisions in length.

g. Disconnect the sawtooth signal.

√30. Check + Gate Out

a. Set the Gate Selector (rear panel) to MAIN GATE.

b. Connect the + GATE OUT signal directly to the vertical input of the test-oscilloscope system. Set the test-oscilloscope system for a deflection factor of two volts/division and a sweep rate of five milliseconds/division.

√ c. CHECK—Test oscilloscope for displayed signal of approximately five divisions in amplitude.

NOTE

A dual time-base unit is required to produce the AUXILIARY signal.

http://manoman.sqhill.com

√d. CHECK—Set the Gate Selector switch (rear-panel) to AUXILIARY. Check that the displayed signal is about five divisions in amplitude.

e. Disconnect all test equipment and remove plug-in units.

NOTE

Refer to Storage System calibration for Remote Erase In Check.

http://manoman.sqhill.com

READOUT SYSTEM

Equipment Required

1. Dual-trace amplifier unit
2. Dual time-base unit

Before you begin, see ADJUSTMENT LOCATIONS 5 *in the Diagrams section.*

Control Settings

Set the control as given under Preliminary Control settings at the beginning of this section.

31. Check/Adjust Readout Operation (R2128, R2183, R2214, R2273 and R2291)

a. Set the Readout Mode switch (S2110) to the Free-Run mode (see Fig. 7-29).

b. Install the dual-trace amplifier in the Left Vertical compartment.

c. CHECK—Press both identify push buttons on the amplifier unit. Check that the words IDENTIFY are within the top and bottom division of the graticule and that the words IDENTIFY are positioned within the left third of the graticule. Check for completeness of characters without overscanning (overscanning causes a bright dot where the traces overlap).

d. ADJUST—Vertical Separation, R2291, so the channel 1 characters are within the top graticule division, and channel 2 characters are within the bottom graticule division (see Fig. 7-29).

e. INTERACTION—Check the adjustment of R427 (Vertical Centering) for optimum centering of the upper and lower readout characters. See Calibration step 10.

f. ADJUST—Character Height, R2273 as needed (see Fig. 7-29).

g. ADJUST—Character Scan, R2128, if characters are overscanned or underscanned (see Fig. 7-29).

h. Remove the dual-trace amplifier unit from the Left Vertical compartment and install it in the Right Vertical compartment.

i. CHECK—Press both identify push bottons on the amplifier unit. Check that the words IDENTIFY are positioned within the center third of the graticule.

j. Remove the dual-trace amplifier unit from the Right Vertical compartment and install it in the Horizontal compartment.

k. CHECK—Press the identify push buttons of the amplifier unit. Check that the words IDENTIFY are positioned within the right third of the graticule.

l. CHECK—If the correct characters are displayed, there is no need to adjust Row Match, R2183, or Column Match, R2214.

m. ADJUST—Row Match, R2183, and Column Match, R2214, for correct readout display of readout characters. Center the adjustments between the points where the errors begin to show.

√32. Check Readout Gate Triggered Operation

a. Set the Readout Mode switch S2110 to Gate Triggered position (see Fig. 7-29).

b. Remove the amplifier unit from the Horizontal compartment and install it in the Left Vertical compartment. Install the time-base unit in the Horizontal compartment.

c. Set the time-base unit for a one second/division sweep rate.

√ d. CHECK—That during the sweep there is no readout information displayed until the sweep has been displayed. At fast sweep rates this is not noticeable.

http://manoman.sqhill.com

STORAGE SYSTEM

Equipment Required

1. Amplifier unit
2. Time-base unit
3. Cable, BNC-to-pin-jack
4. Three-inch screwdriver
5. Dc voltmeter

Before you begin, see ADJUSTMENT LOCATIONS 5 *in the Diagrams section.*

Control Settings

Set the controls as given in the Preliminary Control Settings at the beginning of this section

√33. Check Storage Operation

a. Install the amplifier unit in the Left Vertical compartment and the time-base unit in the Horizontal compartment.

b. Set the time-base unit triggering for the normal mode and internal source. Select the one millisecond/division sweep rate.

c. Connect the 4 V, 1 kHz CALIBRATOR signal to the amplifier unit input. Adjust the time-base unit triggering for a stable display and set the amplifier unit for a four division display. Center the display on the graticule.

d. Adjust the INTENSITY for a moderately bright trace.

e. Set the time-base unit to single sweep.

f. Engage both STORE push buttons (push buttons in).

g. Press the time-base unit reset push button.

√ h. CHECK—Crt display for a well-defined stored display (both UPPER and LOWER storage area).

i. Press the UPPER ERASE push button and then the LOWER ERASE push button.

√ j. CHECK—That both storage areas are erased.

√ k. CHECK—Press the LOCATE push button and check for a spot display at the left edge of the graticule.

l. Set the time-base unit triggering to auto mode.

m. Rotate the VIEWTIME control fully counterclockwise.

n. Press in both AUTO ERASE push buttons.

√ o. CHECK—That the display is stored and then erased in approximately one-second intervals.

√ p. CHECK—Rotate the VIEWTIME control (in a clockwise direction) to approximately midrange. Check that the display is stored for a longer period of time before it is automatically erased. Press and release both ERASE push buttons. Check that the display is erased and remains blanked for the time selected by the VIEWTIME control.

q. Set both AUTO ERASE push buttons to non auto erase and both STORE push buttons to non store (push buttons out).

r. Set the dual time-base unit to the delayed sweep mode with the delaying sweep rate at 0.1 millisecond and delayed sweep rate at 0.5 microsecond. Rotate the position control and delay time multiplier dial to position the rising portion of the waveform near graticule center. Adjust the INTENSITY control so that the display is just visible and adjust the FOCUS control for sharpest trace.

s. Press in both STORE push buttons. Note that the rising portion of the waveform can not be completely stored.

http://manoman.sqhill.com

t. Press both ERASE push buttons.

√ u. CHECK—Press the INTEGRATE push button. Check for improved stored display on the fast-rising portion of the waveform.

NOTE

The lower the intensity, the longer the integration period required to store the trace. If the trace does not fully store on the first attempt, repeat the integration for a longer period, or with higher intensity. Using lower intensity and longer integration produces better resolution on jitter-free signals.

w. Disconnect the CALIBRATOR signal.

√ 34. Check Stored Writing Speed

NOTE

The Storage Writing Speed specifications apply for a new crt. Some degradation with usage is normal. Sustained use (six hours or more) of the instrument in non-store mode or in STORE mode with nothing written may cause a temporary decrease in writing speed. Writing speed can be restored by leaving the crt target fully stored for five to fifteen minutes, then erase and resume desired operation.

a. Set both STORE push buttons to the non-store position (push button out).

b. Set the time-base unit triggering for the auto mode and internal source. Set the time-base unit for a calibrated sweep rate of two microseconds/division.

c. Set the input coupling of the amplifier unit to ground. Position the trace vertically within the center six graticule divisions.

d. Adjust the INTENSITY control for a moderately bright trace. Adjust FOCUS control for sharpest trace.

e. Set the time-base unit triggering mode to single sweep. Press the reset push button and check that the ready lamp is on.

f. Engage both STORE push buttons (push button in).

g. Set the time-base unit source switch to line.

√ h. CHECK—Crt for a stored trace. Proper storage of a 2 microsecond sweep indicates a storage writing rate of 500 centimeters per millisecond.

NOTE

If stored display cannot be obtained, increase the INTENSITY and repeat steps d through h.

i. Set both STORE push buttons to the non-store position (push buttons out).

j. Set the time-base unit for a calibrated sweep rate of 0.2 microsecond/division. Set the triggering for the auto mode and internal source.

k. Adjust the INTENSITY control for a moderately bright trace. Adjust FOCUS control for sharpest trace.

l. Set the time-base triggering mode to single sweep. Press the reset push button and check that the ready lamp is on.

m. Engage both STORE push buttons (push buttons in) and both ENHANCE push buttons (push buttons in).

n. Obtain a single sweep trace by setting the triggering source to line.

o. While repeatedly erasing and applying the single sweep trace, adjust the ENHANCE level control sufficiently clockwise to completely store the display without fading the target area positive.

√ p. CHECK—Crt for stored trace. Proper storage of a 0.2 microsecond sweep indicates an enhanced storage writing speed of at least 5000 centimeters per millisecond.

q. INTERACTION—If a stored display cannot be obtained, increase the INTENSITY and repeat parts j through p.

NOTE

The following adjustment steps may affect the stored writing rate checked in the previous step. If the stored writing rate requirements are met and the stored displays are acceptable, do not perform the adjustments in the steps which follow.

http://manoman.sqhill.com

35. Adjust Collimation (R1472)

a. Set the INTENSITY control for a moderately bright trace and adjust the time-base unit triggering for a free-running display. Store the entire crt by positioning the signal from the top to the bottom of the graticule.

b. CHECK—That the crt is entirely stored with uniform brightness.

c. ADJUST—Collimation adjustment R1472 until the top or bottom edge of the crt begins to bow (maximum bowing approximately 0.2 division). Compromise the adjustment of R1472 until the crt display is completely stored with uniform brightness (see Fig. 7-30).

d. INTERACTION—The Collimation adjustment R1472 affects enhanced stored writing rate.

NOTE

The following adjustment steps may affect stored writing rate checked in the previous steps. If the stored writing rate requirements are met and the storage displays are acceptable, do not perform the adjustments in the steps which follow.

36. Adjust Storage and Non-Storage Levels (R1387, R1437, R1386, R1436)

a. Set the time-base unit triggering for auto mode and internal source. Set the sweep rate to one millisecond/division.

b. Set both STORE push buttons to non-store (push buttons out) and set both ENHANCE push buttons to the off position (push buttons out).

c. Connect the 4 V, 1 kHz CALIBRATOR signal to the amplifier unit input. Set the amplifier for dc input coupling and set the deflection factor for approximately four divisions of display. Center the display on the graticule.

d. Set the INTENSITY control for a moderately bright trace and engage both STORE push buttons (push buttons in). Set the INTENSITY control fully counterclockwise (minimum intensity).

e. ADJUST—Preset the Upper Store Level R1387 and the Lower Store Level R1437 until the background level starts to fade positive (see Fig. 7-30).

f. CHECK—Set the INTENSITY control for a moderately bright trace and adjust the time-base unit triggering for a free-running display. Store the entire crt by positioning the signal from the top to the bottom of the graticule. Set both STORE push buttons to non store (push buttons out) and check that the background level fades rapidly (approximately 0.5 second).

g. ADJUST—While repeating part f, adjust the Upper Non-Store Level R1386 and the Lower Non-Store Level R1436 until the background level fades rapidly (approximately 0.5 second).

NOTE

If the non-store level is set too low, the range of the Storage Level adjustment will be reduced.

h. CHECK—Use a dc voltmeter to measure the upper non-store voltage (measure between TP1399 and TP1465) and the lower non-store voltage (measure between TP1449 and TP1465). See Fig. 7-30.

i. ADJUST—The Upper Non-Store Level R1386 and Lower Non-Store Level R1436 for equal voltage levels nearest to the voltage readings taken in part h.

j. Set the INTENSITY control fully counterclockwise. Engage both STORE push buttons and both AUTO ERASE push buttons. Rotate the VIEWTIME control fully counterclockwise.

k. ADJUST—Upper Store Level R1387 and Lower Store Level R1437 until the background level just starts to fade positive.

l. CHECK—Set both AUTO ERASE push buttons to the off position. Rotate the INTENSITY control for a moderately bright trace; then set fully counterclockwise. Check for a completely stored trace.

m. INTERACTION—Adjustment of the non-storage levels affect the adjustment of storage levels. The store level adjustments affect stored writing rate.

n. Set both STORE push buttons to non-store (push buttons out).

http://manoman.sqhill.com

√ 37. Check Remote Erase In Operation

a. Connect the 4 V, 1 kHz CALIBRATOR signal to the amplifier unit input. Set the amplifier unit for a four-division display centered on the graticule.

b. Adjust the INTENSITY for a moderately bright trace.

c. Set the time-base unit to single sweep.

d. Engage both STORE push buttons (push buttons in).

e. Press the time-base unit reset push button. Check crt display for a well-defined stored display (both UPPER and LOWER storage areas).

f. Ground the center pin of the REMOTE ERASE IN connector.

√ g. CHECK—That the storage areas are erased.

This completes the calibration procedure for the 7313/R7313 Oscilloscope. Disconnect all test equipment and replace the side panels.

http://manoman.sqhill.com

INSTRUMENT OPTIONS

Your instrument may be equipped with one or more instrument options. A description of each option is given in the following discussion. Complete option information is incorporated into the appropriate sections of the manual. Refer to Table 5-1 and the Table of Contents for the location of option information.

Conversion kits, for most options, are available and can be installed at a later time. For further information on instrument options, see your Tektronix Products Catalog or contact your Tektronix Field Office.

Option 1

This option deletes the Readout System. Operation of the instrument is unchanged except that there is no alpha-numeric display on the cathode-ray tube.

Option 3

This option provides electro-magnetic shielding so that the instrument will meet the electro-magnetic interference parameters given in the Specification section of the 7313/R7313 Operators manual. To meet the specifications of Option 3, all unused plug-in compartments must be covered with an EMI-shielded blank plug-in panel (Tektronix part number 016-0155-00). One blank panel is required for each unused plug-in compartment.

Option 5 (Rackmount Instruments Only)

Option 5 provides a special fan circuit to allow operation of the R7313 from a power source with from 50 hertz to 440 hertz line frequency.

Option 7

Option 7 deletes the +SAWTOOTH OUT, +GATE OUT, VERT SIG OUT, EXT SS RESET IN, and REMOTE ERASE IN connectors from the rear-panel of the 7313/R7313.

TABLE 5-1

Option Information Locator

Instrument Option	Manual Section	Location of Information
Option 1 (Deletes Readout System)	1 Operating Information	Controls and Connectors External. Delete READOUT Intensity control description. Internal. Delete Readout Mode switch information.
	2 Circuit Description	Block Diagram Description Delete all Readout information.
		Circuit Operation — Logic (diagram 2) Delete readout information from Z-Axis Logic discussion.
		Circuit Operation — Vertical Interface (diagram 3) Delete X-Y disable information from Vertical Channel Switch discussion.
		Circuit Operation — Horizontal Amplifier (diagram 5) Delete X-Y disable information from Horizontal Channel Switch discussion.
		Circuit Operation — Storage Circuit (diagram 10) Delete Readout information from Auto Erase Generator discussion.

http://manoman.sqhill.com

TABLE 5-1 (cont)

Instrument Option	Manual Section	Location of Information
Option 1 (Deletes Readout System) (cont)	3 Maintenance	Circuit Board Replacement Delete step 5 of Calibrator Board Replacement.
		Troubleshooting Techniques Delete reference to removal of the Readout board.
	4 Calibration	Readout System Delete all Readout System steps. (Steps 31 and 32.)
Option 3 (Provides EMI shielding)	1 Operating Information	Plug-In Units EMI information included in Installation discussion.
	2 Circuit Description	Circuit Operation — Low-Voltage Power Supply (diagram 9) Power Input discussion includes electro-magnetic interference information.
	3 Maintenance	Preventive Maintenance CRT. Includes cleaning instructions for EMI mesh filter.
Option 5 (50 hertz to 440 hertz fan on R7313 only)	2 Circuit Description	Circuit Operation — Low-Voltage Power Supply (diagram 9) Power Input discussion includes special fan circuit information.
Option 7 (deletes rear-panel inputs and outputs)	1 Operating Information	Controls and Connectors (External) Delete Ext SS Reset In, Remote Erase In, Vert Signal Out, +Sawtooth Out, and +Gate Out from rear-panel controls and connectors description (see Fig. 1-3).
	2 Circuit Description	Block Diagram Description Delete output signals information.
		Circuit Operation — Trigger Selector (diagrams 3 and 7) Delete vertical signal output information from the Trigger Output discussion.
		Circuit Operation — Output Signals (diagram 6) Delete all output signals information.
	3 Maintenance	Troubleshooting Techniques Delete rear-panel output signals check.
	4 Calibration	Calibrator and Signals In/Out Delete signal input/output checks (steps 26, 27, 28, 29, and 30).
		Storage System Delete Remote Erase In check (step 38).

http://manoman.sqhill.com

REPLACEABLE ELECTRICAL PARTS

PARTS ORDERING INFORMATION

Replacement parts are available from or through your local Tektronix, Inc. Field Office or representative.

Changes to Tektronix instruments are sometimes made to accommodate improved components as they become available, and to give you the benefit of the latest circuit improvements developed in our engineering department. It is therefore important, when ordering parts, to include the following information in your order: Part number, instrument type or number, serial number, and modification number if applicable.

If a part you have ordered has been replaced with a new or improved part, your local Tektronix, Inc. Field Office or representative will contact you concerning any change in part number.

Change information, if any, is located at the rear of this manual.

SPECIAL NOTES AND SYMBOLS

X000	Part first added at this serial number
00X	Part removed after this serial number

ITEM NAME

In the Parts List, an Item Name is separated from the description by a colon (:). Because of space limitations, an Item Name may sometimes appear as incomplete. For further Item Name identification, the U.S. Federal Cataloging Handbook H6-1 can be utilized where possible.

ABBREVIATIONS

ACTR	ACTUATOR	PLSTC	PLASTIC
ASSY	ASSEMBLY	QTZ	QUARTZ
CAP	CAPACITOR	RECP	RECEPTACLE
CER	CERAMIC	RES	RESISTOR
CKT	CIRCUIT	RF	RADIO FREQUENCY
COMP	COMPOSITION	SEL	SELECTED
CONN	CONNECTOR	SEMICOND	SEMICONDUCTOR
ELCTLT	ELECTROLYTIC	SENS	SENSITIVE
ELEC	ELECTRICAL	VAR	VARIABLE
INCAND	INCANDESCENT	WW	WIREWOUND
LED	LIGHT EMITTING DIODE	XFMR	TRANSFORMER
NONWIR	NON WIREWOUND	XTAL	CRYSTAL

http://manoman.sqhill.com

CROSS INDEX MFR. CODE NUMBER TO MANUFACTURER

MFR.CODE	MANUFACTURER	ADDRESS	CITY,STATE,ZIP
00853	SANGAMO ELECTRIC CO., S. CAROLINA DIV.	P. O. BOX 128	PICKENS, SC 29671
01121	ALLEN-BRADLEY CO.	1201 2ND ST. SOUTH	MILWAUKEE, WI 53204
01295	TEXAS INSTRUMENTS, INC., SEMICONDUCTOR GROUP	P. O. BOX 5012	DALLAS, TX 75222
02735	RCA CORP., SOLID STATE DIVISION	ROUTE 202	SOMERVILLE, NY 08876
03508	GENERAL ELECTRIC CO., SEMI-CONDUCTOR PRODUCTS DEPT.	ELECTRONICS PARK	SYRACUSE, NY 13201
04426	ILLINOIS TOOL WORKS, INC., LICON DIV.	6615 W. IRVING PARK BlVD.	CHICAGO, IL 60634
04713	MOTOROLA, INC., SEMICONDUCTOR PRODUCTS DIV.	5005 E. MCDOWELL RD.	PHOENIX, AZ 85036
07263	FAIRCHILD SEMICONDUCTOR, A DIV. OF FAIRCHILD CAMERA AND INSTRUMENT CORP.	464 ELLIS ST.	MOUNTAIN VIEW, CA 94042
07910	TELEDYNE SEMICONDUCTOR	12515 CHADRON AVE.	HAWTHORNE, CA 90250
08806	GENERAL ELECTRIC CO., MINIATURE LAMP PRODUCTS DEPT.	NELA PK.	CLEVELAND, OH 44112
12040	NATIONAL SEMICONDUCTOR CORP.	COMMERCE DRIVE	DANBURY, CT 06810
12697	CLAROSTAT MFG. CO., INC.	LOWER WASHINGTON ST.	DOVER, NH 03820
12969	UNITRODE CORP.	580 PLEASANT ST.	WATERTOWN, MA 02172
13715	FAIRCHILD SEMICONDUCTOR, A DIV. OF FAIRCHILD CAMERA AND INSTRUMENT CORP.	4300 REDWOOD HWY.	SAN RAFAEL, CA 94903
21845	SOLITRON DEVICES, INC., TRANSISTOR DIV.	1177 BlUE HERON BlVD.	RIVIERA BEACH, FL 33404
24931	SPECIALTY CONNECTOR CO., INC.	3560 MADISON AVE.	INDIANAPOLIS, IN 46227
27014	NATIONAL SEMICONDUCTOR CORP.	2900 SAN YSIDRO WAY	SANTA CLARA, CA 95051
56289	SPRAGUE ELECTRIC CO.		NORTH ADAMS, MA 01247
71400	BUSSMAN MFG., DIVISION OF MCGRAW-EDISON CO.	2536 W. UNIVERSITY ST.	ST. LOUIS, MO 63107
71590	CENTRALAB ELECTRONICS, DIV. OF GLOBE-UNION, INC.	5757 N. GREEN BAY AVE.	MILWAUKEE, WI 53201
72982	ERIE TECHNOLOGICAL PRODUCTS, INC.	644 W. 12TH ST.	ERIE, PA 16512
73138	BECKMAN INSTRUMENTS, INC., HELIPOT DIV.	2500 HARBOR BlVD.	FULLERTON, CA 92634
74970	JOHNSON, E. F., CO.	299 10TH AVE. S. W.	WASECA, MN 56093
75042	TRW ELECTRONIC COMPONENTS, IRC FIXED RESISTORS, PHILADELPHIA DIVISION	401 N. BROAD ST.	PHILADELPHIA, PA 19108
77342	AMF, INC., POTTER AND BRUMFIELD DIV.	1200 E. BROADWAY	PRINCETON, IN 47570
79727	C-W INDUSTRIES	550 DAVISVILLE RD.	WARMINSTER, PA 18974
80009	TEKTRONIX, INC.	P. O. BOX 500	BEAVERTON, OR 97077
80294	BOURNS, INC., INSTRUMENT DIV.	6135 MAGNOLIA AVE.	RIVERSIDE, CA 92506
80740	BECKMAN INSTRUMENTS, INC.	2500 HARBOR BlVD.	FULLERTON, CA 92634
81483	INTERNATIONAL RECTIFIER CORP.	9220 SUNSET BlVD.	LOS ANGELES, CA 90069
83003	VARO, INC.	800 W. GARLAND AVE.	GARLAND, TX 75040
86684	RCA CORP., ELECTRONIC COMPONENTS	415 S. 5TH ST.	HARRISON, NJ 07029
90201	MALLORY CAPACITOR CO., DIV. OF P. R. MALLORY CO., INC.	3029 E. WASHINGTON ST.	INDIANAPOLIS, IN 46206
91637	DALE ELECTRONICS, INC.	P. O. BOX 609	COLUMBUS, NB 68601
93410	ESSEX INTERNATIONAL, INC., CONTROLS DIV. MANSFIELD PLANT	P. O. BOX 1007	MANSFIELD, OH 44903
95121	QUALITY COMPONENTS, INC.	P. O. BOX 113	ST. MARYS, PA 15857
99942	CENTRALAB SEMICONDUCTOR, CENTRALAB ELECTRONICS, DIV. OF GLOBE-UNION, INC.	4501 N. ARDEN DR.	EL MONTE, CA 91734

http://manoman.sqhill.com

Ckt No.	Tektronix Part No.	Serial/Model No. Eff	Dscont	Name & Description	Mfr Code	Mfr Part Number
A1	670-1956-00	B010100	B129999	CKT BOARD ASSY:--MAIN INTERFACE	80009	670-1956-00
A1	670-1956-01	B130000		CKT BOARD ASSY:--MAIN INTERFACE	80009	670-1956-01
A2	670-1370-02	B010100	B099999	CKT BOARD ASSY:--LOGIC	80009	670-1370-02
A2	670-1370-04	B100000		CKT BOARD ASSY:--LOGIC	80009	670-1370-04
A3	670-1371-05			CKT BOARD ASSY:--TRIGGER SELECTOR	80009	670-1371-05
A4	670-1373-07			CKT BOARD ASSY:--VERTICAL INTERFACE	80009	670-1373-07
A5	670-2124-00			CKT BOARD ASSY:--VERTICAL AMPLIFIER	80009	670-2124-00
A6	670-2127-00			CKT BOARD ASSY:--HORIZONTAL AMPLIFIER	80009	670-2127-00
A7	670-1961-00			CKT BOARD ASSY:--OUTPUT SIGNALS	80009	670-1961-00
A8	670-2123-00			CKT BOARD ASSY:--CALIBRATOR	80009	670-2123-00
A9	670-2125-00	B010100	B119999	CKT BOARD ASSY:--HIGH VOLTAGE	80009	670-2125-00
A9	670-2125-01	B120000		CKT BOARD ASSY:--HIGH VOLTAGE	80009	670-2125-01
A10	670-2126-01			CKT BOARD ASSY:--Z-AXIS	80009	670-2126-01
A11	670-1382-04	B010100	B209999	CKT BOARD ASSY:--RECTIFIER	80009	670-1382-04
A11	670-1382-06	B210000		CKT BOARD ASSY:--RECTIFIER	80009	670-1382-06
A12	670-1376-09	B010100	B179999	CKT BOARD ASSY:--LOW-VOLTAGE REGULATOR	80009	670-1376-09
A12	670-1376-15	B180000		CKT BOARD ASSY:--LOW VOLTAGE REGULATOR	80009	670-1376-15
A13	670-0702-02	B010100	B169999X	CKT BOARD ASSY:--GRATICULE LIGHTS(2)	80009	670-0702-02
A14	670-2122-00			CKT BOARD ASSY:--STORAGE SWITCH	80009	670-2122-00
A15	670-2221-00	B010100	B099999	CKT BOARD ASSY:--STORAGE	80009	670-2221-00
A15	670-2221-01	B090000		CKT BOARD ASSY:--STORAGE	80009	670-2221-01
A16	670-1900-01	B010100	B109999	CKT BOARD ASSY:--READOUT	80009	670-1900-01
A16	670-1900-03	B110000		CKT BOARD ASSY:--READOUT	80009	670-1900-03
A17	670-4346-00	XB220000		CKT BOARD ASSY:--PROTECTION	80009	670-4346-00
C1	290-0271-00			CAP.,FXD,ELCTLT:9UF,+20-15%,125V	56289	109D905C2125F2
C3	290-0302-00			CAP.,FXD,ELCTLT:100UF,10%,20V	12954	D100D20KI
C5	290-0302-00			CAP.,FXD,ELCTLT:100UF,10%,20V	12954	D100D20KI
C7	290-0302-00			CAP.,FXD,ELCTLT:100UF,10%,20V	12954	D100D20KI
C9	290-0271-00			CAP.,FXD,ELCTLT:9UF,+20-15%,125V	56289	109D905C2125F2
C16	283-0068-00			CAP.,FXD,CER DI:0.01UF,+100-0%,500V	56289	19C241
C18	283-0068-00			CAP.,FXD,CER DI:0.01UF,+100-0%,500V	56289	19C241
C44	283-0068-00	B010100	B129999	CAP.,FXD,CER DI:0.01UF,+100-0%,500V	56289	19C241
C44	283-0081-00	B130000		CAP.,FXD,CER DI:0.1UF,+80-20%,25V	56289	36C600
C47	281-0638-00	B010100	B129999X	CAP.,FXD,CER DI:240PF,5%,500V	72982	301000Z5D241J
C48	283-0068-00	B010100	B129999	CAP.,FXD,CER DI:0.01UF,+100-0%,500V	56289	19C241
C48	283-0081-00	B130000		CAP.,FXD,CER DI:0.1UF,+80-20%,25V	56289	36C600
C55	283-0003-00			CAP.,FXD,CER DI:0.01UF,+80-20%,150V	72982	855-547E103Z
C58	283-0003-00			CAP.,FXD,CER DI:0.01UF,+80-20%,150V	72982	855-547E103Z
C59	283-0672-00			CAP.,FXD,MICA D:200PF,1%,500V	00853	D155F201F0
C60	281-0564-00			CAP.,FXD,CER DI:24PF,5%,500V	72982	301-000C0G0240J
C67	281-0605-00			CAP.,FXD,CER DI:200PF,10%,500V	04222	7001-1375
C76	283-0000-00			CAP.,FXD,CER DI:0.001UF,+100-0%,500V	72982	831-516E102P
C89	283-0003-00			CAP.,FXD,CER DI:0.01UF,+80-20%,150V	72982	855-547E103Z
C136	281-0547-00			CAP.,FXD,CER DI:2.7PF,10%,500V	72982	301-000C0J0279C
C137	283-0000-00			CAP.,FXD,CER DI:0.001UF,+100-0%,500V	72982	831-516E102P
C138	281-0503-00			CAP.,FXD,CER DI:8PF,+/-0.5PF,500V	72982	301-000C0H0809D
C146	281-0547-00			CAP.,FXD,CER DI:2.7PF,10%,500V	72982	301-000C0J0279C
C148	281-0503-00			CAP.,FXD,CER DI:8PF,+/-0.5PF,500V	72982	301-000C0H0809D
C149	283-0000-00			CAP.,FXD,CER DI:0.001UF,+100-0%,500V	72982	831-516E102P
C152	283-0000-00			CAP.,FXD,CER DI:0.001UF,+100-0%,500V	72982	831-516E102P
C166	281-0547-00			CAP.,FXD,CER DI:2.7PF,10%,500V	72982	301-000C0J0279C
C168	281-0503-00			CAP.,FXD,CER DI:8PF,+/-0.5PF,500V	72982	301-000C0H0809D
C193	283-0026-00			CAP.,FXD,CER DI:0.2UF,+80-20%,25V	56289	274C3
C195	283-0003-00			CAP.,FXD,CER DI:0.01UF,+80-20%,150V	72982	855-547E103Z
C196	283-0026-00			CAP.,FXD,CER DI:0.2UF,+80-20%,25V	56289	274C3

http://manoman.sqhill.com

Ckt No.	Tektronix Part No.	Serial/Model No. Eff	Dscont	Name & Description	Mfr Code	Mfr Part Number
C198	283-0026-00			CAP.,FXD,CER DI:0.2UF,+80-20%,25V	56289	274C3
C207	281-0538-00			CAP.,FXD,CER DI:1PF,20%,500V	95121	QC-1MM20%
C208	281-0528-00			CAP.,FXD,CER DI:82PF,+/-8.2PF,500V	72982	301-000U2M0820K
C215	281-0589-00			CAP.,FXD,CER DI:170PF,5%,500V	72982	301-057Z5D0171J
C217	281-0537-00			CAP.,FXD,CER DI:0.68PF,20%,600V	80009	281-0537-00
C220	283-0177-00			CAP.,FXD,CER DI:1UF,+80-20%,25V	72982	8131N039651105Z
C227	281-0503-00			CAP.,FXD,CER DI:8PF,+/-0.5PF,500V	72982	301-000C0H0809D
C260	283-0000-00			CAP.,FXD,CER DI:0.001UF,+100-0%,500V	72982	831-516E102P
C301	283-0003-00			CAP.,FXD,CER DI:0.01UF,+80-20%,150V	72982	855-547E103Z
C305	283-0004-00			CAP.,FXD,CER DI:0.02UF,+80-20%,150V	72982	855-547E203Z
C322	281-0572-00			CAP.,FXD,CER DI:6.8PF,+/-0.5PF,500V	72982	301-000C0H0689D
C329	281-0572-00			CAP.,FXD,CER DI:6.8PF,+/-0.5PF,500V	72982	301-000C0H0689D
C342	283-0000-00			CAP.,FXD,CER DI:0.001UF,+100-0%,500V	72982	831-516E102P
C348	283-0000-00			CAP.,FXD,CER DI:0.001UF,+100-0%,500V	72982	831-516E102P
C401	281-0504-00			CAP.,FXD,CER DI:10PF,+/-1PF,500V	72982	301-000C0G0100F
C402	281-0604-00			CAP.,FXD,CER DI:2.2PF,+/-0.25PF,500V	72982	301-000C0J0229C
C403	281-0504-00			CAP.,FXD,CER DI:10PF,+/-1PF,500V	72982	301-000C0G0100F
C405	281-0153-00			CAP.,VAR,AIR DI:1.7-10PF,250V	74970	187-0106-005
C406	281-0604-00			CAP.,FXD,CER DI:2.2PF,+/-0.25PF,500V	72982	301-000C0J0229C
C407	281-0549-00			CAP.,FXD,CER DI:68PF,10%,500V	72982	301-000U2J0680K
C409	281-0503-00			CAP.,FXD,CER DI:8PF,+/-0.5PF,500V	72982	301-000C0H0809D
C411	281-0506-00			CAP.,FXD,CER DI:12PF,+/-1.2PF,500V	72982	301-000C0G0120K
C413	281-0546-00			CAP.,FXD,CER DI:330PF,10%,500V	72982	301-000X5P0331K
C415	281-0627-00			CAP.,FXD,CER DI:1PF,+/-0.25PF,500V	72982	301-000C0G0109C
C419	281-0627-00			CAP.,FXD,CER DI:1PF,+/-0.25PF,500V	72982	301-000C0G0109C
C430	281-0504-00			CAP.,FXD,CER DI:10PF,+/-1PF,500V	72982	301-000C0G0100F
C433	281-0504-00			CAP.,FXD,CER DI:10PF,+/-1PF,500V	72982	301-000C0G0100F
C442	283-0003-00			CAP.,FXD,CER DI:0.01UF,+80-20%,150V	72982	855-547E103Z
C445	281-0536-00			CAP.,FXD,CER DI:1000PF,10%,500V	72982	301-055X5P0102K
C469	281-0160-00			CAP.,VAR,CER DI:7-25PF,350V	72982	538-011B7-25
C477	283-0057-00			CAP.,FXD,CER DI:0.1UF,+80-20%,200V	56289	274C10
C492	283-0003-00			CAP.,FXD,CER DI:0.01UF,+80-20%,150V	72982	855-547E103Z
C494	283-0003-00			CAP.,FXD,CER DI:0.01UF,+80-20%,150V	72982	855-547E103Z
C541	283-0001-00			CAP.,FXD,CER DI:0.005UF,+100-0%,500V	72982	831-559E502P
C543	283-0008-00			CAP.,FXD,CER DI:0.1UF,500V	72982	8151N501651104M
C546	283-0002-00			CAP.,FXD,CER DI:0.01UF,+80-20%,500V	72982	811-546E103Z
C549	281-0064-00			CAP.,VAR,PLSTC:0.25-1.5PF,600V	72982	530-002
C552	283-0081-00	B010100	B030362	CAP.,FXD,CER DI:0.1UF,+80-20%,25V	56289	36C600
C552	283-0024-00	B030363		CAP.,FXD,CER DI:0.1UF,+80-20%,30V	72982	835-000C0H0509D
C557	283-0003-00			CAP.,FXD,CER DI:0.01UF,+80-20%,150V	72982	855-547E103Z
C561	283-0001-00			CAP.,FXD,CER DI:0.005UF,+100-0%,500V	72982	831-559E502P
C563	283-0008-00			CAP.,FXD,CER DI:0.1UF,500V	72982	8151N501651104M
C566	283-0002-00			CAP.,FXD,CER DI:0.01UF,+80-20%,500V	72982	811-546E103Z
C569	281-0064-00			CAP.,VAR,PLSTC:0.25-1.5PF,600V	72982	530-002
C590	283-0003-00			CAP.,FXD,CER DI:0.01UF,+80-20%,150V	72982	855-547E103Z
C591	283-0008-00			CAP.,FXD,CER DI:0.1UF,500V	72982	8151N501651104M
C595	290-0572-00			CAP.,FXD,ELCTLT:0.1UF,20%,50V	56289	196D104X0050HA1
C597	290-0534-00			CAP.,FXD,ELCTLT:1UF,20%,35V	56289	196D105X0035HA1
C599	290-0572-00			CAP.,FXD,ELCTLT:0.1UF,20%,50V	56289	196D104X0050HA1
C605	281-0612-00	B010100	B219999	CAP.,FXD,CER DI:5.6PF,+/-0.5PF,500V	72982	374-001C0H0569D
C605	281-0584-00	B220000		CAP.,FXD,CER DI:100PF,5%,500V	72982	301-000Y5D0101J
C610	283-0000-00			CAP.,FXD,CER DI:0.001UF,+100-0%,500V	72982	831-516E102P
C615	281-0513-00			CAP.,FXD,CER DI:27PF,+/-5.4PF,500V	72982	301-000P2G0270M
C619	283-0000-00			CAP.,FXD,CER DI:0.001UF,+100-0%,500V	72982	831-516E102P

http://manoman.sqhill.com

Ckt No.	Tektronix Part No.	Serial/Model No. Eff	Dscont	Name & Description	Mfr Code	Mfr Part Number
C622	283-0003-00			CAP.,FXD,CER DI:0.01UF,+80-20%,150V	72982	855-547E103Z
C637	281-0510-00			CAP.,FXD,CER DI:22PF,+/-4.4PF,500V	72982	301-000C0G0220M
C639	283-0111-00			CAP.,FXD,CER DI:0.1UF,20%,50V	72982	8131N075651104M
C643	283-0111-00			CAP.,FXD,CER DI:0.1UF,20%,50V	72982	8131N075651104M
C662	283-0080-00			CAP.,FXD,CER DI:0.022UF,+80-20%,25V	56289	19C611
C667	283-0000-00			CAP.,FXD,CER DI:0.001UF,+100-0%,500V	72982	831-516E102P
C669	283-0111-00			CAP.,FXD,CER DI:0.1UF,20%,50V	72982	8131N075651104M
C679	283-0111-00			CAP.,FXD,CER DI:0.1UF,20%,50V	72982	8131N075651104M
C806	290-0468-00			CAP.,FXD,ELCTLT:250UF,+75-10%,150V	56289	68D10470
C808	290-0507-00			CAP.,FXD,ELCTLT:1800UF,+75-10%,75V	56289	68D10472
C809	290-0507-00			CAP.,FXD,ELCTLT:1800UF,+75-10%,75V	56289	68D10472
C810	285-0555-00			CAP.,FXD,PLSTC:0.1UF,20%,100V	56289	410P10401
C811	290-0581-00			CAP.,FXD,ELCTLT:14,000UF,+75-10%,25V	56289	68D10489
C813	290-0506-00			CAP.,FXD,ELCTLT:9600UF,+100-10%,25V	56289	68D10471
C814	290-0506-00			CAP.,FXD,ELCTLT:9600UF,+100-10%,25V	56289	68D10471
C820	285-0555-00			CAP.,FXD,PLSTC:0.1UF,20%,100V	56289	410P10401
C821	290-0508-00			CAP.,FXD,ELCTLT:18,000UF,+100-10%,15V	56289	68D10444
C823	283-0004-00			CAP.,FXD,CER DI:0.02UF,+80-20%,150V	72982	855-547E203Z
C827	283-0077-00	XB060000		CAP.,FXD,CER DI:330PF,5%,500V	56289	40C94A3
C858	283-0078-00			CAP.,FXD,CER DI:0.001UF,20%,500V	56289	20C114A8
C866	283-0078-00			CAP.,FXD,CER DI:0.001UF,20%,500V	56289	20C114A8
C876	283-0328-00	XB050000		CAP.,FXD,CER DI:0.03UF,+80-20%,200V	72982	8131N225651303Z
C880	283-0638-00			CAP.,FXD,MICA D:130PF,1%,100V	00853	D151E131F0
C889	290-0415-00			CAP.,FXD,ELCTLT:5.6UF,10%,35V	56289	150D565X9035B2
C923	281-0591-00			CAP.,FXD,CER DI:5600PF,20%,200V	72982	3930-01Z5V0562Z
C936	283-0178-00	XB050000		CAP.,FXD,CER DI:0.1UF,+80-20%,100V	72982	8131N145651104Z
C943	283-0078-00	XB060000		CAP.,FXD,CER DI:0.001UF,20%,500V	56289	20C114A8
C943	283-0078-00	XB060000		CAP.,FXD,CER DI:0.001UF,20%,500V	56289	20C114A8
C950	283-0083-00			CAP.,FXD,CER DI:0.0047UF,20%,500V	72982	811-565C472J
C975	283-0000-00			CAP.,FXD,CER DI:0.001UF,+100-0%,500V	72982	831-516E102P
C979	281-0591-00			CAP.,FXD,CER DI:5600PF,20%,200V	72982	3930-01Z5V0562Z
C985	283-0083-00			CAP.,FXD,CER DI:0.0047UF,20%,500V	72982	811-565C472J
C1001[1]	285-0562-00			CAP.,FXD,PLSTC:0.47UF,20%,400V	56289	410P47404
C1064	285-0703-00			CAP.,FXD,PLSTC:0.1UF,5%,100V	56289	410P112
C1079	281-0605-00			CAP.,FXD,CER DI:200PF,10%,500V	04222	7001-1375
C1139	283-0006-00			CAP.,FXD,CER DI:0.02UF,+80-20%,500V	72982	841-541E203Z
C1141	283-0092-00	B010100	B199999	CAP.,FXD,CER DI:0.03UF,+80-20%,200V	72982	845-534E303Z
C1141	283-0068-00	B220000		CAP.,FXD,CER DI:0.01UF,+100-0%,500V	56289	19C241
C1144	283-0092-00	B010100	B199999	CAP.,FXD,CER DI:0.03UF,+80-20%,200V	72982	845-534E303Z
C1144	283-0068-00	B200000		CAP.,FXD,CER DI:0.01UF,+100-0%,500V	56289	19C241
C1146	283-0092-00	B010100	B199999	CAP.,FXD,CER DI:0.03UF,+80-20%,200V	72982	845-534E303Z
C1146	283-0068-00	B200000		CAP.,FXD,CER DI:0.01UF,+100-0%,500V	56289	19C241
C1148	283-0092-00	B010100	B199999	CAP.,FXD,CER DI:0.03UF,+80-20%,200V	72982	845-534E303Z
C1148	283-0198-00	B200000		CAP.,FXD,CER DI:0.22UF,20%,50V	72982	8131N075651224M
C1151	283-0092-00	B010100	B199999	CAP.,FXD,CER DI:0.03UF,+80-20%,200V	72982	845-534E303Z
C1151	283-0068-00	B200000		CAP.,FXD,CER DI:0.01UF,+100-0%,500V	56289	19C241
C1158	281-0064-00			CAP.,VAR,PLSTC:0.25-1.5PF,600V	72982	530-002
C1159	281-0604-00	XB200000		CAP.,FXD,CER DI:2.2PF,+/-0.25PF,500V	72982	301-000C0J0229C
C1184	283-0002-00	B010100	B199999	CAP.,FXD,CER DI:0.01UF,+80-20%,500V	72982	811-546E103Z
C1184	283-0068-00	B200000		CAP.,FXD,CER DI:0.01UF,+100-0%,500V	56289	19C241
C1193	283-0002-00	B010100	B199999	CAP.,FXD,CER DI:0.01UF,+80-20%,500V	72982	811-546E103Z
C1193	283-0068-00	B200000		CAP.,FXD,CER DI:0.01UF,+100-0%,500V	56289	19C241
C1204	283-0000-00	B010100	B029999X	CAP.,FXD,CER DI:0.001UF,+100-0%,500V	72982	831-516E102P
C1213	290-0573-00	XB030000		CAP.,FXD,ELCTLT:2.7UF,20%,50V	56289	196D275X0050JA1
C1214	290-0522-00	B010100	B029999X	CAP.,FXD,ELCTLT:1UF,20%,50V	56289	196D105X0050HA1
C1215	285-0686-00			CAP.,FXD,PLSTC:0.068UF,10%,100V	56289	410P108
C1219	290-0272-00			CAP.,FXD,ELCTLT:47UF,20%,50V	56289	109D476X0050F2
C1220	290-0164-00	B010100	B039999	CAP.,FXD,ELCTLT:1UF,+50-10%,150V	56289	30D105F150BA2
C1220	290-0159-00	B040000		CAP.,FXD,ELCTLT:2UF,+50-10%,150V	56289	30D205F150BB4
C1222	283-0077-00	XB050000		CAP.,FXD,CER DI:330PF,5%,500V	56289	40C94A3
C1223	283-0003-00	XB050000		CAP.,FXD,CER DI:0.01UF,+80-20%,150V	72982	855-547E103Z

[1]Option 5 only

http://manoman.sqhill.com

Ckt No.	Tektronix Part No.	Serial/Model No. Eff	Dscont	Name & Description	Mfr Code	Mfr Part Number
C1225	281-0523-00			CAP.,FXD,CER DI:100PF,+/-20PF,350V	72982	301-000U2M0101M
C1226	290-0528-00	B010100	B049999X	CAP.,FXD,ELCTLT:15UF,20%,50V	90201	TDC156M050WLC
C1228	283-0002-00			CAP.,FXD,CER DI:0.01UF,+80-20%,500V	72982	811-546E103Z
C1229	283-0341-00	XB050000		CAP.,FXD,CER DI:0.047UF,10%,100V	72982	8131N145W5R473K
C1230	290-0522-00			CAP.,FXD,ELCTLT:1UF,20%,50V	56289	196D105X0050HA1
C1232	290-0522-00			CAP.,FXD,ELCTLT:1UF,20%,50V	56289	196D105X0050HA1
C1236	290-0572-00			CAP.,FXD,ELCTLT:0.1UF,20%,50V	56289	196D104X0050HA1
C1240	290-0194-00			CAP.,FXD,ELCTLT:10UF,+50-10%,100V	56289	30D106F100DC4
C1241	283-0178-00			CAP.,FXD,CER DI:0.1UF,+80-20%,100V	72982	8131N145651104Z
C1242	283-0198-00			CAP.,FXD,CER DI:0.22UF,20%,50V	72982	8131N075651224M
C1247	283-0021-00			CAP.,FXD,CER DI:0.001UF,20%,5000V	72982	828-005Y5S0102M
C1250	283-0105-00			CAP.,FXD,CER DI:0.01UF,+80-20%,2000V	56289	41C316
C1254	283-0162-00			CAP.,FXD,CER DI:0.01UF,+80-30%,5000V	56289	7Y4312
C1255	283-0021-00			CAP.,FXD,CER DI:0.001UF,20%,5000V	72982	828-005Y5S0102M
C1257	281-0523-00			CAP.,FXD,CER DI:100PF,+/-20PF,350V	72982	301-000U2M0101M
C1264	290-0164-00			CAP.,FXD,ELCTLT:1UF,+50-10%,150V	56289	30D105F150BA2
C1266	281-0512-00			CAP.,FXD,CER DI:27PF,+/-2.7PF,500V	72982	308-000C0G0270K
C1268	283-0021-00			CAP.,FXD,CER DI:0.001UF,20%,5000V	72982	828-005Y5S0102M
C1269	283-0162-00			CAP.,FXD,CER DI:0.01UF,+80-30%,5000V	56289	7Y4312
C1275	283-0279-00			CAP.,FXD,CER DI:0.001UF,20%,3000V	72982	878Y5S102M
C1276	283-0279-00			CAP.,FXD,CER DI:0.001UF,20%,3000V	72982	878Y5S102M
C1281	283-0162-00			CAP.,FXD,CER DI:0.01UF,+80-30%,5000V	56289	7Y4312
C1283	283-0162-00			CAP.,FXD,CER DI:0.01UF,+80-30%,5000V	56289	7Y4312
C1286	283-0114-00			CAP.,FXD,CER DI:0.0015UF,5%,200V	72982	805-509B152J
C1291	290-0159-00			CAP.,FXD,ELCTLT:2UF,+50-10%,150V	56289	30D205F150BB4
C1307	283-0080-00			CAP.,FXD,CER DI:0.022UF,+80-20%,25V	56289	19C611
C1314	290-0512-00			CAP.,FXD,ELCTLT:22UF,20%,15V	56289	196D226X0015KA1
C1322	290-0523-00			CAP.,FXD,ELCTLT:2.2UF,20%,20V	56289	196D225X0025HA1
C1330	283-0024-00	XB140000		CAP.,FXD,CER DI:0.1UF,+80-20%,30V	72982	835-000C0H0509D
C1340	283-0024-00	XB140000		CAP.,FXD,CER DI:0.1UF,+80-20%,30V	72982	835-000C0H0509D
C1345	290-0512-00			CAP.,FXD,ELCTLT:22UF,20%,15V	56289	196D226X0015KA1
C1351	281-0523-00			CAP.,FXD,CER DI:100PF,+/-20PF,350V	72982	301-000U2M0101M
C1357	283-0268-00			CAP.,FXD,CER DI:0.015UF,10%,50V	72982	8131N075W5R153K
C1361	290-0534-00			CAP.,FXD,ELCTLT:1UF,20%,35V	56289	196D105X0035HA1
C1367	283-0003-00			CAP.,FXD,CER DI:0.01UF,+80-20%,150V	72982	855-547E103Z
C1368	283-0003-00			CAP.,FXD,CER DI:0.01UF,+80-20%,150V	72982	855-547E103Z
C1377	290-0572-00			CAP.,FXD,ELCTLT:0.1UF,20%,50V	56289	196D104X0050HA1
C1379	290-0527-00			CAP.,FXD,ELCTLT:15UF,20%,20V	90201	TDC156M020NLF
C1399	283-0001-00	XB050000		CAP.,FXD,CER DI:0.005UF,+100-0%,500V	72982	831-559E502P
C1406	290-0303-00			CAP.,FXD,ELCTLT:5UF,+75-10%,300V	56289	34D505F300EJ4
C1411	290-0534-00			CAP.,FXD,ELCTLT:1UF,20%,35V	56289	196D105X0035HA1
C1417	283-0003-00			CAP.,FXD,CER DI:0.01UF,+80-20%,150V	72982	855-547E103Z
C1418	283-0003-00			CAP.,FXD,CER DI:0.01UF,+80-20%,150V	72982	855-547E103Z
C1425	281-0628-00	XB030000		CAP.,FXD,CER DI:15PF,5%,600V	72982	301-000C0G0150G
C1427	290-0572-00			CAP.,FXD,ELCTLT:0.1UF,20%,50V	56289	196D104X0050HA1
C1429	290-0527-00			CAP.,FXD,ELCTLT:15UF,20%,20V	90201	TDC156M020NLF
C1449	283-0001-00	XB050000		CAP.,FXD,CER DI:0.005UF,+100-0%,500V	72982	831-559E502P
C1456	290-0303-00			CAP.,FXD,ELCTLT:5UF,+75-10%,300V	56289	34D505F300EJ4
C1465	283-0005-00	XB120000		CAP.,FXD,CER DI:0.01UF,+100-0%,250V	72982	8131-250651103P
C1496	290-0529-00			CAP.,FXD,ELCTLT:47UF,20%,20V	56289	196D476X0020LA3
C2101	283-0004-00			CAP.,FXD,CER DI:0.02UF,+80-20%,150V	72982	855-547E203Z
C2109	283-0003-00			CAP.,FXD,CER DI:0.01UF,+80-20%,150V	72982	855-547E103Z
C2112	283-0077-00			CAP.,FXD,CER DI:330PF,5%,500V	56289	40C94A3

http://manoman.sqhill.com

Ckt No.	Tektronix Part No.	Serial/Model No. Eff	Dscont	Name & Description	Mfr Code	Mfr Part Number
C2115	290-0534-00			CAP.,FXD,ELCTLT:1UF,20%,35V	56289	196D105X0035HA1
C2117	290-0534-00			CAP.,FXD,ELCTLT:1UF,20%,35V	56289	196D105X0035HA1
C2119	290-0534-00			CAP.,FXD,ELCTLT:1UF,20%,35V	56289	196D105X0035HA1
C2121	283-0594-00			CAP.,FXD,MICA D:0.001UF,1%,100V	00853	D151F102F0
C2135	285-0698-00			CAP.,FXD,PLSTC:0.0082UF,5%,100V	56289	410P82251
C2140	283-0103-00			CAP.,FXD,CER DI:180PF,5%,500V	56289	40C638
C2144	281-0544-00			CAP.,FXD,CER DI:5.6PF,10%,500V	72982	301-000C0H0569D
C2145	290-0534-00			CAP.,FXD,ELCTLT:1UF,20%,35V	56289	196D105X0035HA1
C2155	283-0103-00			CAP.,FXD,CER DI:180PF,5%,500V	56289	40C638
C2183	283-0032-00			CAP.,FXD,CER DI:470PF,5%,500V	72982	831-500Z5D471J
C2185	283-0004-00			CAP.,FXD,CER DI:0.02UF,+80-20%,150V	72982	855-547E203Z
C2214	283-0032-00			CAP.,FXD,CER DI:470PF,5%,500V	72982	831-500Z5D471J
C2242	283-0000-00			CAP.,FXD,CER DI:0.001UF,+100-0%,500V	72982	831-516E102P
C2244	283-0004-00			CAP.,FXD,CER DI:0.02UF,+80-20%,150V	72982	855-547E203Z
C2255	283-0000-00			CAP.,FXD,CER DI:0.001UF,+100-0%,500V	72982	831-516E102P
C2281	283-0054-00	XB110000		CAP.,FXD,CER DI:150PF,5%,200V	72982	855-535U2J151J
CR26	152-0141-02			SEMICOND DEVICE:SILICON,30V,150MA	07910	1N4152
CR27	152-0141-02			SEMICOND DEVICE:SILICON,30V,150MA	07910	1N4152
CR33	152-0141-02			SEMICOND DEVICE:SILICON,30V,150MA	07910	1N4152
CR42	152-0141-00	B010100	B129999X	SEMICOND DEVICE:SILICON,30V,150MA	07910	CD8220
CR44	152-0141-02	XB130000		SEMICOND DEVICE:SILICON,30V,150MA	07910	1N4152
CR48	152-0141-02	XB130000		SEMICOND DEVICE:SILICON,30V,150MA	07910	1N4152
CR84	152-0333-00			SEMICOND DEVICE:SILICON,55V,200MA	80009	152-0333-00
CR85	152-0333-00			SEMICOND DEVICE:SILICON,55V,200MA	80009	152-0333-00
CR93	152-0141-02			SEMICOND DEVICE:SILICON,30V,150MA	07910	1N4152
CR124	152-0141-02			SEMICOND DEVICE:SILICON,30V,150MA	07910	1N4152
CR125	152-0141-02			SEMICOND DEVICE:SILICON,30V,150MA	07910	1N4152
CR126	152-0141-02			SEMICOND DEVICE:SILICON,30V,150MA	07910	1N4152
CR130	152-0141-02			SEMICOND DEVICE:SILICON,30V,150MA	07910	1N4152
CR140	152-0141-02			SEMICOND DEVICE:SILICON,30V,150MA	07910	1N4152
CR155	152-0141-02			SEMICOND DEVICE:SILICON,30V,150MA	07910	1N4152
CR160	152-0141-02			SEMICOND DEVICE:SILICON,30V,150MA	07910	1N4152
CR238	152-0141-02			SEMICOND DEVICE:SILICON,30V,150MA	07910	1N4152
CR341	152-0141-02			SEMICOND DEVICE:SILICON,30V,150MA	07910	1N4152
CR349	152-0141-02			SEMICOND DEVICE:SILICON,30V,150MA	07910	1N4152
CR442	152-0141-02			SEMICOND DEVICE:SILICON,30V,150MA	07910	1N4152
CR445	152-0141-02			SEMICOND DEVICE:SILICON,30V,150MA	07910	1N4152
CR510	152-0141-02			SEMICOND DEVICE:SILICON,30V,150MA	07910	1N4152
CR531	152-0141-02			SEMICOND DEVICE:SILICON,30V,150MA	07910	1N4152
CR532	152-0141-02			SEMICOND DEVICE:SILICON,30V,150MA	07910	1N4152
CR535	152-0153-00			SEMICOND DEVICE:SILICON,15V,50MA	13715	FD7003
CR536	152-0153-00			SEMICOND DEVICE:SILICON,15V,50MA	13715	FD7003
CR552	152-0141-02			SEMICOND DEVICE:SILICON,30V,150MA	07910	1N4152
CR553	152-0141-02			SEMICOND DEVICE:SILICON,30V,150MA	07910	1N4152
CR621	152-0141-02			SEMICOND DEVICE:SILICON,30V,150MA	07910	1N4152
CR622	152-0141-02			SEMICOND DEVICE:SILICON,30V,150MA	07910	1N4152
CR635	152-0141-02			SEMICOND DEVICE:SILICON,30V,150MA	07910	1N4152
CR641	152-0141-02			SEMICOND DEVICE:SILICON,30V,150MA	07910	1N4152
CR672	152-0141-02			SEMICOND DEVICE:SILICON,30V,150MA	07910	1N4152
CR674	152-0141-02			SEMICOND DEVICE:SILICON,30V,150MA	07910	1N4152
CR676	152-0141-02			SEMICOND DEVICE:SILICON,30V,150MA	07910	1N4152
CR806	152-0488-00			SEMICOND DEVICE:SILICON,200V,1500MA	80009	152-0488-00

http://manoman.sqhill.com

Ckt No.	Tektronix Part No.	Serial/Model No. Eff	Dscont	Name & Description	Mfr Code	Mfr Part Number
CR808	152-0488-00			SEMICOND DEVICE:SILICON,200V,1500MA	80009	152-0488-00
CR811	152-0406-00			SEMICOND DEVICE:SILICON,200V,3A	83003	W601
CR820	152-0423-00			SEMICOND DEVICE:SILICON,300V,3A	04713	1N5000
CR821	152-0423-00			SEMICOND DEVICE:SILICON,300V,3A	04713	1N5000
CR852	152-0141-02			SEMICOND DEVICE:SILICON,30V,150MA	07910	1N4152
CR861	152-0141-02			SEMICOND DEVICE:SILICON,30V,150MA	07910	1N4152
CR867	152-0061-00			SEMICOND DEVICE:SILICON,175V,100MA	80009	152-0061-00
CR868	152-0061-00			SEMICOND DEVICE:SILICON,175V,100MA	80009	152-0061-00
CR875	152-0066-00			SEMICOND DEVICE:SILICON,400V,750MA	02735	37304
CR883	152-0141-02			SEMICOND DEVICE:SILICON,30V,150MA	07910	1N4152
CR885	152-0141-02			SEMICOND DEVICE:SILICON,30V,150MA	07910	1N4152
CR888	152-0141-02			SEMICOND DEVICE:SILICON,30V,150MA	07910	1N4152
CR891	152-0141-02			SEMICOND DEVICE:SILICON,30V,150MA	07910	1N4152
CR894	152-0141-02			SEMICOND DEVICE:SILICON,30V,150MA	07910	1N4152
CR895	152-0141-02	XB180000		SEMICOND DEVICE:SILICON,30V,150MA	07910	1N4152
CR896	152-0141-02			SEMICOND DEVICE:SILICON,30V,150MA	07910	1N4152
CR903	152-0066-00			SEMICOND DEVICE:SILICON,400V,750MA	02735	37304
CR920	152-0141-02			SEMICOND DEVICE:SILICON,30V,150MA	07910	1N4152
CR924	152-0061-00			SEMICOND DEVICE:SILICON,175V,100MA	80009	152-0061-00
CR925	152-0061-00			SEMICOND DEVICE:SILICON,175V,100MA	80009	152-0061-00
CR935	152-0066-00			SEMICOND DEVICE:SILICON,400V,750MA	02735	37304
CR941	152-0141-02			SEMICOND DEVICE:SILICON,30V,150MA	07910	1N4152
CR950	152-0141-02			SEMICOND DEVICE:SILICON,30V,150MA	07910	1N4152
CR951	152-0141-02			SEMICOND DEVICE:SILICON,30V,150MA	07910	1N4152
CR952	152-0141-02			SEMICOND DEVICE:SILICON,30V,150MA	07910	1N4152
CR958	152-0066-00			SEMICOND DEVICE:SILICON,400V,750MA	02735	37304
CR961	152-0141-02			SEMICOND DEVICE:SILICON,30V,150MA	07910	1N4152
CR973	152-0061-00	XB030000		SEMICOND DEVICE:SILICON,175V,100MA	80009	152-0061-00
CR980	152-0141-02			SEMICOND DEVICE:SILICON,30V,150MA	07910	1N4152
CR981	152-0141-02			SEMICOND DEVICE:SILICON,30V,150MA	07910	1N4152
CR989	152-0066-00			SEMICOND DEVICE:SILICON,400V,750MA	02735	37304
CR1021	152-0141-02			SEMICOND DEVICE:SILICON,30V,150MA	07910	1N4152
CR1023	152-0141-02			SEMICOND DEVICE:SILICON,30V,150MA	07910	1N4152
CR1024	152-0141-02			SEMICOND DEVICE:SILICON,30V,150MA	07910	1N4152
CR1026	152-0141-02			SEMICOND DEVICE:SILICON,30V,150MA	07910	1N4152
CR1137	152-0141-02	B010100	B019999	SEMICOND DEVICE:SILICON,30V,150MA	07910	1N4152
CR1137	152-0107-00	B020000		SEMICOND DEVICE:SILICON,375V,400MA	80009	152-0107-00
CR1161	152-0141-02	B010100	B019999	SEMICOND DEVICE:SILICON,30V,150MA	07910	1N4152
CR1161	152-0061-00	B020000		SEMICOND DEVICE:SILICON,175V,100MA	80009	152-0061-00
CR1215	152-0141-02			SEMICOND DEVICE:SILICON,30V,150MA	07910	1N4152
CR1220	152-0413-00	B010100	B069999	SEMICOND DEVICE:SILICON,400V,750MA	80009	152-0413-00
CR1220	152-0400-00	B070000		SEMICOND DEVICE:SILICON,400V,1A	80009	152-0400-00
CR1223	152-0413-00	XB050000		SEMICOND DEVICE:SILICON,400V,750MA	80009	152-0413-00
CR1226	152-0107-00			SEMICOND DEVICE:SILICON,375V,400MA	80009	152-0107-00
CR1230	152-0061-00			SEMICOND DEVICE:SILICON,175V,100MA	80009	152-0061-00
CR1244	152-0107-00			SEMICOND DEVICE:SILICON,375V,400MA	80009	152-0107-00
CR1253	152-0242-00			SEMICOND DEVICE:SILICON,225V,200MA	12969	NDP341
CR1254	152-0242-00			SEMICOND DEVICE:SILICON,225V,200MA	12969	NDP341
CR1255	152-0242-00			SEMICOND DEVICE:SILICON,225V,200MA	12969	NDP341
CR1258	152-0242-00			SEMICOND DEVICE:SILICON,225V,200MA	12969	NDP341
CR1264	152-0061-00			SEMICOND DEVICE:SILICON,175V,100MA	80009	152-0061-00
CR1265	152-0107-00			SEMICOND DEVICE:SILICON,375V,400MA	80009	152-0107-00
CR1268	152-0061-00			SEMICOND DEVICE:SILICON,175V,100MA	80009	152-0061-00

http://manoman.sqhill.com

Ckt No.	Tektronix Part No.	Serial/Model No. Eff	Dscont	Name & Description	Mfr Code	Mfr Part Number
CR1269	152-0061-00			SEMICOND DEVICE:SILICON,175V,100MA	80009	152-0061-00
CR1270	152-0061-00			SEMICOND DEVICE:SILICON,175V,100MA	80009	152-0061-00
CR1281	152-0409-00			SEMICOND DEVICE:SILICON,12,000V,5MA	83003	VG-12X
CR1304	152-0141-02			SEMICOND DEVICE:SILICON,30V,150MA	07910	1N4152
CR1306	152-0141-02			SEMICOND DEVICE:SILICON,30V,150MA	07910	1N4152
CR1308	152-0141-02			SEMICOND DEVICE:SILICON,30V,150MA	07910	1N4152
CR1314	152-0141-02			SEMICOND DEVICE:SILICON,30V,150MA	07910	1N4152
CR1316	152-0141-02			SEMICOND DEVICE:SILICON,30V,150MA	07910	1N4152
CR1322	152-0141-02			SEMICOND DEVICE:SILICON,30V,150MA	07910	1N4152
CR1326	152-0141-02			SEMICOND DEVICE:SILICON,30V,150MA	07910	1N4152
CR1332	152-0141-02			SEMICOND DEVICE:SILICON,30V,150MA	07910	1N4152
CR1342	152-0141-02			SEMICOND DEVICE:SILICON,30V,150MA	07910	1N4152
CR1348	152-0107-00			SEMICOND DEVICE:SILICON,375V,400MA	80009	152-0107-00
CR1351	152-0333-00			SEMICOND DEVICE:SILICON,55V,200MA	80009	152-0333-00
CR1354	152-0333-00			SEMICOND DEVICE:SILICON,55V,200MA	80009	152-0333-00
CR1363	152-0141-02			SEMICOND DEVICE:SILICON,30V,150MA	07910	1N4152
CR1371	152-0333-00			SEMICOND DEVICE:SILICON,55V,200MA	80009	152-0333-00
CR1374	152-0333-00			SEMICOND DEVICE:SILICON,55V,200MA	80009	152-0333-00
CR1379	152-0333-00			SEMICOND DEVICE:SILICON,55V,200MA	80009	152-0333-00
CR1381	152-0333-00			SEMICOND DEVICE:SILICON,55V,200MA	80009	152-0333-00
CR1392	152-0333-00			SEMICOND DEVICE:SILICON,55V,200MA	80009	152-0333-00
CR1397	152-0107-00			SEMICOND DEVICE:SILICON,375V,400MA	80009	152-0107-00
CR1399	152-0107-00			SEMICOND DEVICE:SILICON,375V,400MA	80009	152-0107-00
CR1400	152-0107-00			SEMICOND DEVICE:SILICON,375V,400MA	80009	152-0107-00
CR1413	152-0141-02			SEMICOND DEVICE:SILICON,30V,150MA	07910	1N4152
CR1421	152-0333-00			SEMICOND DEVICE:SILICON,55V,200MA	80009	152-0333-00
CR1424	152-0333-00			SEMICOND DEVICE:SILICON,55V,200MA	80009	152-0333-00
CR1429	152-0333-00			SEMICOND DEVICE:SILICON,55V,200MA	80009	152-0333-00
CR1431	152-0333-00			SEMICOND DEVICE:SILICON,55V,200MA	80009	152-0333-00
CR1442	152-0333-00			SEMICOND DEVICE:SILICON,55V,200MA	80009	152-0333-00
CR1447	152-0107-00			SEMICOND DEVICE:SILICON,375V,400MA	80009	152-0107-00
CR1449	152-0107-00			SEMICOND DEVICE:SILICON,375V,400MA	80009	152-0107-00
CR1450	152-0107-00			SEMICOND DEVICE:SILICON,375V,400MA	80009	152-0107-00
CR1461	152-0246-00			SEMICOND DEVICE:SILICON,400PIV,200MA	07910	CD12676
CR1470	152-0242-00	XB090000		SEMICOND DEVICE:SILICON,225V,200MA	12969	NDP341
CR2124	152-0141-02			SEMICOND DEVICE:SILICON,30V,150MA	07910	1N4152
CR2125	152-0141-02			SEMICOND DEVICE:SILICON,30V,150MA	07910	1N4152
CR2127	152-0141-02			SEMICOND DEVICE:SILICON,30V,150MA	07910	1N4152
CR2140	152-0141-02			SEMICOND DEVICE:SILICON,30V,150MA	07910	1N4152
CR2141	152-0141-02			SEMICOND DEVICE:SILICON,30V,150MA	07910	1N4152
CR2142	152-0141-02			SEMICOND DEVICE:SILICON,30V,150MA	07910	1N4152
CR2145	152-0141-02			SEMICOND DEVICE:SILICON,30V,150MA	07910	1N4152
CR2146	152-0141-02			SEMICOND DEVICE:SILICON,30V,150MA	07910	1N4152
CR2156	152-0141-02			SEMICOND DEVICE:SILICON,30V,150MA	07910	1N4152
CR2157	152-0141-02			SEMICOND DEVICE:SILICON,30V,150MA	07910	1N4152
CR2162	152-0141-02			SEMICOND DEVICE:SILICON,30V,150MA	07910	1N4152
CR2163	152-0141-02			SEMICOND DEVICE:SILICON,30V,150MA	07910	1N4152
CR2166	152-0141-02			SEMICOND DEVICE:SILICON,30V,150MA	07910	1N4152
CR2167	152-0141-02			SEMICOND DEVICE:SILICON,30V,150MA	07910	1N4152
CR2170	152-0141-02			SEMICOND DEVICE:SILICON,30V,150MA	07910	1N4152
CR2171	152-0141-02			SEMICOND DEVICE:SILICON,30V,150MA	07910	1N4152
CR2174	152-0141-02			SEMICOND DEVICE:SILICON,30V,150MA	07910	1N4152
CR2175	152-0141-02			SEMICOND DEVICE:SILICON,30V,150MA	07910	1N4152

http://manoman.sqhill.com

Ckt No.	Tektronix Part No.	Serial/Model No. Eff	Dscont	Name & Description	Mfr Code	Mfr Part Number
CR2192	152-0141-02			SEMICOND DEVICE:SILICON,30V,150MA	07910	1N4152
CR2193	152-0141-02			SEMICOND DEVICE:SILICON,30V,150MA	07910	1N4152
CR2196	152-0141-02			SEMICOND DEVICE:SILICON,30V,150MA	07910	1N4152
CR2198	152-0141-02			SEMICOND DEVICE:SILICON,30V,150MA	07910	1N4152
CR2226	152-0141-02			SEMICOND DEVICE:SILICON,30V,150MA	07910	1N4152
CR2235 THRU CR2266	152-0333-00	XB220000		SEMICOND DEVICE:SILICON,55V,200MA	80009	152-0333-00
DL400	119-0371-00			DELAY LINE,ELEC:	80009	119-0371-00
DS1001	150-0121-02			LAMP,CARTRIDGE:GREEN,5V,60MA	80009	150-0121-02
DS1090	150-0125-00	B010100	B169999X	LAMP,INCANDESCE:5V,115MA	08806	7335
DS1091	150-0125-00	B010100	B169999X	LAMP,INCANDESCE:5V,115MA	08806	7335
DS1092	150-0125-00	B010100	B169999X	LAMP,INCANDESCE:5V,115MA	08806	7335
DS1093	150-0125-00	B010100	B169999X	LAMP,INCANDESCE:5V,115MA	08806	7335
DS1094	150-0125-00	B010100	B169999X	LAMP,INCANDESCE:5V,115MA	08806	7335
DS1095	150-0125-00	B010100	B169999X	LAMP,INCANDESCE:5V,115MA	08806	7335
F813	159-0021-00	B010100	B049999	FUSE,CARTRIDGE:3AG,2A,250V,FAST-BLOW	71400	AGC 2
F813	159-0022-00	B050000		FUSE,CARTRIDGE:3AG,1A,250V,FAST-BLOW	71400	AGC 1
F814	159-0021-00	B010100	B049999	FUSE,CARTRIDGE:3AG,2A,250V,FAST-BLOW	71400	AGC 2
F814	159-0022-00	B050000		FUSE,CARTRIDGE:3AG,1A,250V,FAST-BLOW	71400	AGC 1
F855	159-0030-00			FUSE,CARTRIDGE:3AG,0.3A,250V,FAST-BLOW	71400	AGC3-10
F1000	159-0026-00			FUSE,CARTRIDGE:3AG,3.2A,125V,SLOW-BLOW	71400	MDX 3 2/10
F1161	159-0024-00			FUSE,CARTRIDGE:3AG,0.06A,250V,FAST BLOW	71400	AGC 1/16
F1163	159-0024-00			FUSE,CARTRIDGE:3AG,0.06A,250V,FAST BLOW	71400	AGC 1/16
J1	131-0767-02	B010100	B029999	CONNECTOR,RCPT,:76 CONTACT	80009	131-0767-02
J1	131-0767-08	B030000		CONNECTOR,RCPT,:PLUG-IN CKT BD,70 CONTACT	80009	131-0767-08
J2	131-0767-02	B010100	B029999	CONNECTOR,RCPT,:76 CONTACT	80009	131-0767-02
J2	131-0767-08	B030000		CONNECTOR,RCPT,:PLUG-IN CKT BD,70 CONTACT	80009	131-0767-08
J3	131-0767-00	B010100	B029999	CONNECTOR,RCPT,:76 CONTACT	80009	131-0767-00
J3	131-0767-07	B030000		CONNECTOR,RCPT,:PLUG-IN CKT BD,70 CONTACT	80009	131-0767-07
J26	131-1003-00			CONNECTOR BODY,:CKT BD MT,3 PRONG	80009	131-1003-00
J27	131-1003-00			CONNECTOR BODY,:CKT BD MT,3 PRONG	80009	131-1003-00
J401	131-1003-00			CONNECTOR BODY,:CKT BD MT,3 PRONG	80009	131-1003-00
J403	131-1003-00			CONNECTOR BODY,:CKT BD MT,3 PRONG	80009	131-1003-00
J601	131-1003-00			CONNECTOR BODY,:CKT BD MT,3 PRONG	80009	131-1003-00
J603	131-1003-00			CONNECTOR BODY,:CKT BD MT,3 PRONG	80009	131-1003-00
J629	131-0955-00			CONNECTOR,RCPT,:BNC,FEMALE	24931	28JR200-1
J649	131-0955-00			CONNECTOR,RCPT,:BNC,FEMALE	24931	28JR200-1
J679	131-0955-00			CONNECTOR,RCPT,:BNC,FEMALE	24931	28JR200-1
J1047	131-0955-00			CONNECTOR,RCPT,:BNC,FEMALE	24931	28JR200-1
J1049	131-0955-00			CONNECTOR,RCPT,:BNC,FEMALE	24931	28JR200-1
J1050	131-0955-00			CONNECTOR,RCPT,:BNC,FEMALE	24931	28JR200-1
J2132	131-1003-00			CONNECTOR BODY,:CKT BD MT,3 PRONG	80009	131-1003-00
J2138	131-1003-00			CONNECTOR BODY,:CKT BD MT,3 PRONG	80009	131-1003-00
J2139	131-1003-00			CONNECTOR BODY,:CKT BD MT,3 PRONG	80009	131-1003-00
J2292	131-1003-00			CONNECTOR BODY,:CKT BD MT,3 PRONG	80009	131-1003-00
J2296	131-1003-00			CONNECTOR BODY,:CKT BD MT,3 PRONG	80009	131-1003-00
J2299	131-1003-00			CONNECTOR BODY,:CKT BD MT,3 PRONG	80009	131-1003-00
L470[1]	276-0543-00	XB200000		SHIELDING BEAD,:	80009	276-0543-00
L472	114-0309-00			TRANSFORMER,RF:9.6-18.7UH,CORE 276-0511-00	80009	114-0309-00
L480[1]	276-0543-00	XB200000		SHIELDING BEAD,:	80009	276-0543-00
L482	114-0309-00			TRANSFORMER,RF:9.6-18.7UH,CORE 276-0511-00	80009	114-0309-00
L1099[2]						
L1219	108-0646-00			COIL,RF:80UH	80009	108-0646-00
L2283	108-0331-00			COIL,RF:0.75UH	80009	108-0331-00
LR55	108-0245-00	XB100000		COIL,RF:3.9UH	80009	108-0245-00

[1]Added if neccessary.

[2]Furnished as a unit with Delay Line.

http://manoman.sqhill.com

Ckt No.	Tektronix Part No.	Serial/Model No. Eff	Dscont	Name & Description	Mfr Code	Mfr Part Number
LR193	108-0604-00	B010100	B099999	COIL,RF:3.2UH	80009	108-0604-00
LR193	108-0245-00	B100000		COIL,RF:3.9UH	80009	108-0245-00
LR195	108-0604-00	B010100	B099999	COIL,RF:3.2UH	80009	108-0604-00
LR195	108-0245-00	B100000		COIL,RF:3.9UH	80009	108-0245-00
LR198	108-0604-00	B010100	B099999	COIL,RF:3.2UH	80009	108-0604-00
LR198	108-0245-00	B100000		COIL,RF:3.9UH	80009	108-0245-00
LR475	108-0659-00			COIL,RF:1.5UH	80009	108-0659-00
LR485	108-0659-00			COIL,RF:1.5UH	80009	108-0659-00
Q90A,B	151-0232-00			TRANSISTOR:SILICON,NPN,DUAL	12040	NS7348
Q108	151-0199-00			TRANSISTOR:SILICON,PNP	04713	MPS3640
Q132	151-0199-00			TRANSISTOR:SILICON,PNP	04713	MPS3640
Q137	151-0223-00			TRANSISTOR:SILICON,NPN	80009	151-0223-00
Q142	151-0199-00			TRANSISTOR:SILICON,PNP	04713	MPS3640
Q147	151-0223-00			TRANSISTOR:SILICON,NPN	80009	151-0223-00
Q150	151-0223-00			TRANSISTOR:SILICON,NPN	80009	151-0223-00
Q162	151-0199-00			TRANSISTOR:SILICON,PNP	04713	MPS3640
Q167	151-0223-00			TRANSISTOR:SILICON,NPN	80009	151-0223-00
Q236A,B	151-0232-00			TRANSISTOR:SILICON,NPN,DUAL	12040	NS7348
Q238	151-0190-00			TRANSISTOR:SILICON,NPN	80009	151-0190-00
Q242	151-0221-00			TRANSISTOR:SILICON,PNP	80009	151-0221-00
Q252	151-0221-00			TRANSISTOR:SILICON,PNP	80009	151-0221-00
Q314	151-0190-00			TRANSISTOR:SILICON,NPN	80009	151-0190-00
Q334	151-0190-00			TRANSISTOR:SILICON,NPN	80009	151-0190-00
Q336	151-0190-00			TRANSISTOR:SILICON,NPN	80009	151-0190-00
Q344	151-0221-00			TRANSISTOR:SILICON,PNP	80009	151-0221-00
Q346	151-0221-00			TRANSISTOR:SILICON,PNP	80009	151-0221-00
Q420	151-0220-00			TRANSISTOR:SILICON,PNP	80009	151-0220-00
Q424	151-0220-00			TRANSISTOR:SILICON,PNP	80009	151-0220-00
Q435	151-0190-00			TRANSISTOR:SILICON,NPN	80009	151-0190-00
Q440	151-0190-00			TRANSISTOR:SILICON,NPN	80009	151-0190-00
Q444	151-0190-00			TRANSISTOR:SILICON,NPN	80009	151-0190-00
Q452	151-0190-00			TRANSISTOR:SILICON,NPN	80009	151-0190-00
Q456	151-0127-00			TRANSISTOR:SILICON,NPN	07263	S6075
Q462	151-0190-00			TRANSISTOR:SILICON,NPN	80009	151-0190-00
Q466	151-0127-00			TRANSISTOR:SILICON,NPN	07263	S6075
Q470	151-0124-00	B010100	B219999	TRANSISTOR:SILICON,NPN,SEL FROM 2N3501	80009	151-0124-00
Q470	151-0124-03	B220000		TRANSISTOR:SILICON,NPN,SEL FROM 2N3501	80009	151-0124-03
Q480	151-0124-00	B010100	B219999	TRANSISTOR:SILICON,NPN,SEL FROM 2N3501	80009	151-0124-00
Q480	151-0124-03	B220000		TRANSISTOR:SILICON,NPN,SEL FROM 2N3501	80009	151-0124-03
Q541	151-0190-00			TRANSISTOR:SILICON,NPN	80009	151-0190-00
Q545	151-0280-00			TRANSISTOR:SILICON,PNP	04713	SS8065
Q548	151-0279-00			TRANSISTOR:SILICON,NPN	80009	151-0279-00
Q555	151-0190-00			TRANSISTOR:SILICON,NPN	80009	151-0190-00
Q561	151-0188-00			TRANSISTOR:SILICON,PNP	01295	2N3906
Q565	151-0280-00			TRANSISTOR:SILICON,PNP	04713	SS8065
Q568	151-0279-00			TRANSISTOR:SILICON,NPN	80009	151-0279-00
Q606	151-0221-00			TRANSISTOR:SILICON,PNP	80009	151-0221-00
Q618	151-0221-00			TRANSISTOR:SILICON,PNP	80009	151-0221-00
Q620	151-0220-00	B010100	B219999	TRANSISTOR:SILICON,PNP	80009	151-0220-00
Q620	151-0221-00	B220000		TRANSISTOR:SILICON,PNP	80009	151-0221-00
Q631	151-0190-00			TRANSISTOR:SILICON,NPN	80009	151-0190-00
Q634	151-0190-00			TRANSISTOR:SILICON,NPN	80009	151-0190-00
Q640	151-0220-00			TRANSISTOR:SILICON,PNP	80009	151-0220-00
Q662	151-0190-00			TRANSISTOR:SILICON,NPN	80009	151-0190-00
Q666	151-0190-00			TRANSISTOR:SILICON,NPN	80009	151-0190-00
Q672	151-0188-00			TRANSISTOR:SILICON,PNP	01295	2N3906

http://manoman.sqhill.com

Ckt No.	Tektronix Part No.	Serial/Model No. Eff	Dscont	Name & Description	Mfr Code	Mfr Part Number
Q827	151-0223-00			TRANSISTOR:SILICON,NPN	80009	151-0223-00
Q829	151-0223-00			TRANSISTOR:SILICON,NPN	80009	151-0223-00
Q835	151-0334-00			TRANSISTOR:SILICON,NPN	80009	151-0334-00
Q850	151-0337-00			TRANSISTOR:SILICON,NPN	21845	93SX287
Q852	151-0276-00			TRANSISTOR:SILICON,PNP	04713	2N5087
Q860	151-0347-00			TRANSISTOR:SILICON,NPN	80009	151-0347-00
Q863	151-0347-00			TRANSISTOR:SILICON,NPN	80009	151-0347-00
Q869	151-0347-00			TRANSISTOR:SILICON,NPN	80009	151-0347-00
Q872	151-0279-00			TRANSISTOR:SILICON,NPN	07263	S25381
Q874	151-0336-00	B010100	B149999	TRANSISTOR:SILICON,NPN	21845	93SX288
Q874	151-0487-00	B150000		TRANSISTOR:SILICON,NPN		
Q876A,B	151-0232-00			TRANSISTOR:SILICON,NPN,DUAL	12040	NS7348
Q886A,B	151-0232-00			TRANSISTOR:SILICON,NPN,DUAL	12040	NS7348
Q896	151-0228-00			TRANSISTOR:SILICON,PNP,SEL FROM 2N4888	80009	151-0228-00
Q900	151-0347-00			TRANSISTOR:SILICON,NPN	80009	151-0347-00
Q903	151-0336-00	B010100	B149999	TRANSISTOR:SILICON,NPN	21845	93SX288
Q903	151-0487-00	B150000		TRANSISTOR:SILICON,NPN		
Q908	151-0292-00			TRANSISTOR:SILICON,NPN	01295	TIS100
Q909	151-0292-00			TRANSISTOR:SILICON,NPN	01295	TIS100
Q910	151-0292-00			TRANSISTOR:SILICON,NPN	01295	TIS100
Q919A,B	151-0232-00			TRANSISTOR:SILICON,NPN,DUAL	12040	NS7348
Q926	151-0347-00			TRANSISTOR:SILICON,NPN	80009	151-0347-00
Q931	151-0260-02			TRANSISTOR:SILICON,NPN	04713	2N5859
Q933	151-0337-00	B010100	B149999	TRANSISTOR:SILICON,NPN	21845	93SX287
Q933	151-0487-00	B150000		TRANSISTOR:SILICON,NPN		
Q936A,B	151-0232-00			TRANSISTOR:SILICON,NPN,DUAL	12040	NS7348
Q943A,B	151-0232-00			TRANSISTOR:SILICON,NPN,DUAL	12040	NS7348
Q952	151-0134-00			TRANSISTOR:SILICON,PNP	04713	2N2905A
Q956	151-0260-02			TRANSISTOR:SILICON,NPN	04713	2N5859
Q958	151-0337-00	B010100	B149999	TRANSISTOR:SILICON,NPN	21845	93SX287
Q958	151-0487-00	B150000		TRANSISTOR:SILICON,NPN		
Q964A,B	151-0232-00			TRANSISTOR:SILICON,NPN,DUAL	12040	NS7348
Q985	151-0136-00			TRANSISTOR:SILICON,NPN	02735	35495
Q988	151-0337-00			TRANSISTOR:SILICON,NPN	21845	93SX287
Q1061	151-0190-00			TRANSISTOR:SILICON,NPN	80009	151-0190-00
Q1066	151-0190-00			TRANSISTOR:SILICON,NPN	80009	151-0190-00
Q1070	151-0220-00			TRANSISTOR:SILICON,PNP	80009	151-0220-00
Q1072	151-0220-00			TRANSISTOR:SILICON,PNP	80009	151-0220-00
Q1107	151-0190-00			TRANSISTOR:SILICON,NPN	80009	151-0190-00
Q1135	151-0292-00			TRANSISTOR:SILICON,NPN	01295	TIS100
Q1137	151-0292-00			TRANSISTOR:SILICON,NPN	01295	TIS100
Q1148	151-0188-00			TRANSISTOR:SILICON,PNP	04713	2N3906
Q1152	151-0406-00			TRANSISTOR:SILICON,PNP	07263	S37880
Q1154	151-0292-00			TRANSISTOR:SILICON,NPN	01295	TIS100
Q1156	151-0223-00			TRANSISTOR:SILICON,NPN	80009	151-0223-00
Q1201	151-0126-00			TRANSISTOR:SILICON,NPN	07263	2N2484
Q1206	151-0188-00			TRANSISTOR:SILICON,PNP	04713	2N3906
Q1214	151-0136-00			TRANSISTOR:SILICON,NPN	02735	35495
Q1216	151-0140-00			TRANSISTOR:SILICON,NPN	02735	36568
Q1221	151-0292-00			TRANSISTOR:SILICON,NPN	01295	TIS100
Q1224	151-0228-00			TRANSISTOR:SILICON,PNP,SEL FROM 2N4888	80009	151-0228-00
Q1226	151-0292-00			TRANSISTOR:SILICON,NPN	01295	TIS100
Q1231	151-0350-00			TRANSISTOR:SILICON,PNP	07263	2N5401

http://manoman.sqhill.com

Ckt No.	Tektronix Part No.	Serial/Model No. Eff	Dscont	Name & Description	Mfr Code	Mfr Part Number
Q1234	151-0347-00			TRANSISTOR:SILICON,NPN	80009	151-0347-00
Q1301	151-0190-00			TRANSISTOR:SILICON,NPN	80009	151-0190-00
Q1313	151-0508-00			TRANSISTOR:SILICON,NPN,UNIJUNCTION	03508	2N6027
Q1323	151-0508-00			TRANSISTOR:SILICON,NPN,UNIJUNCTION	03508	2N6027
Q1355	151-0190-00			TRANSISTOR:SILICON,NPN	80009	151-0190-00
Q1358	151-0190-00			TRANSISTOR:SILICON,NPN	80009	151-0190-00
Q1375	151-0190-00			TRANSISTOR:SILICON,NPN	80009	151-0190-00
Q1378	151-0190-00			TRANSISTOR:SILICON,NPN	80009	151-0190-00
Q1390	151-0350-00			TRANSISTOR:SILICON,PNP	07263	2N5401
Q1394	151-0297-00			TRANSISTOR:SILICON,NPN	07263	SE7057
Q1399	151-0169-00			TRANSISTOR:SILICON,NPN	02735	2N3439
Q1405	151-0292-00			TRANSISTOR:SILICON,NPN	01295	TIS100
Q1425	151-0190-00			TRANSISTOR:SILICON,NPN	80009	151-0190-00
Q1428	151-0190-00			TRANSISTOR:SILICON,NPN	80009	151-0190-00
Q1440	151-0350-00			TRANSISTOR:SILICON,PNP	07263	2N5401
Q1444	151-0297-00			TRANSISTOR:SILICON,NPN	07263	SE7057
Q1449	151-0169-00			TRANSISTOR:SILICON,NPN	02735	2N3439
Q1455	151-0292-00			TRANSISTOR:SILICON,NPN	01295	TIS100
Q1461	151-0126-00			TRANSISTOR:SILICON,NPN	07263	2N2484
Q1470	151-0292-00			TRANSISTOR:SILICON,NPN	01295	TIS100
Q1482	151-0292-00			TRANSISTOR:SILICON,NPN	01295	TIS100
Q2108	151-0223-00			TRANSISTOR:SILICON,NPN	80009	151-0223-00
Q2112	151-0221-00			TRANSISTOR:SILICON,PNP	80009	151-0221-00
Q2138	151-0188-00			TRANSISTOR:SILICON,PNP	04713	2N3906
Q2153	151-0192-00			TRANSISTOR:SILICON,NPN,SEL FROM MPS6521	80009	151-0192-00
Q2159	151-0190-00			TRANSISTOR:SILICON,NPN	80009	151-0190-00
Q2215A,B	151-0232-00			TRANSISTOR:SILICON,NPN,DUAL	12040	NS7348
Q2223	151-0190-00			TRANSISTOR:SILICON,NPN	80009	151-0190-00
Q2225	151-0188-00			TRANSISTOR:SILICON,PNP	04713	2N3906
Q2229	151-0190-00			TRANSISTOR:SILICON,NPN	80009	151-0190-00
Q2240	151-0190-00			TRANSISTOR:SILICON,NPN	80009	151-0190-00
Q2286	151-0188-00			TRANSISTOR:SILICON,PNP	04713	2N3906
Q2287	151-0188-00			TRANSISTOR:SILICON,PNP	04713	2N3906
Q2296	151-0188-00			TRANSISTOR:SILICON,PNP	04713	2N3906
Q2299	151-0188-00			TRANSISTOR:SILICON,PNP	04713	2N3906
R12	321-0260-00			RES.,FXD,FILM:4.99K OHM,1%,0.125W	75042	CEAT0-4991F
R14	321-0260-00			RES.,FXD,FILM:4.99K OHM,1%,0.125W	75042	CEAT0-4991F
R20	315-0103-00			RES.,FXD,CMPSN:10K OHM,5%,0.25W	01121	CB1035
R21	315-0103-00			RES.,FXD,CMPSN:10K OHM,5%,0.25W	01121	CB1035
R26	315-0122-00	XB130000		RES.,FXD,CMPSN:1.2K OHM,5%,0.25W	01121	CB1225
R28	315-0510-00			RES.,FXD,CMPSN:51 OHM,5%,0.25W	01121	CB5105
R29	315-0510-00			RES.,FXD,CMPSN:51 OHM,5%,0.25W	01121	CB5105
R31	315-0122-00			RES.,FXD,CMPSN:1.2K OHM,5%,0.25W	01121	CB1225
R33	315-0682-00			RES.,FXD,CMPSN:6.8K OHM,5%,0.25W	01121	CB6825
R34	315-0122-00			RES.,FXD,CMPSN:1.2K OHM,5%,0.25W	01121	CB1225
R35	315-0122-00			RES.,FXD,CMPSN:1.2K OHM,5%,0.25W	01121	CB1225
R36	321-0231-00			RES.,FXD,FILM:2.49K OHM,1%,0.125W	75042	CEAT0-2491F
R37	315-0152-00	XB130000		RES.,FXD,CMPSN:1.5K OHM,5%,0.25W	01121	CB1525
R38	315-0152-00			RES.,FXD,CMPSN:1.5K OHM,5%,0.25W	01121	CB1525
R39	315-0152-00			RES.,FXD,CMPSN:1.5K OHM,5%,0.25W	01121	CB1525
R42	315-0105-00			RES.,FXD,CMPSN:1M OHM,5%,0.25W	01121	CB1055
R44	315-0334-00	B010100	B129999	RES.,FXD,CMPSN:330K OHM,5%,0.25W	01121	CB3345
R44	315-0152-00	B130000		RES.,FXD,CMPSN:1.5K OHM,5%,0.25W	01121	CB1525

http://manoman.sqhill.com

Ckt No.	Tektronix Part No.	Serial/Model No. Eff	Dscont	Name & Description	Mfr Code	Mfr Part Number
R46	315-0151-00	B010100	B129999X	RES.,FXD,CMPSN:150 OHM,5%,0.25W	01121	CB1515
R47	315-0683-00	B010100	B129999	RES.,FXD,CMPSN:68K OHM,5%,0.25W	01121	CB6835
R47	315-0243-00	B130000		RES.,FXD,CMPSN:24K OHM,5%,0.25W	01121	CB2435
R48	315-0334-00	B010100	B129999	RES.,FXD,CMPSN:330K OHM,5%,0.25W	01121	CB3345
R48	315-0152-00	B130000		RES.,FXD,CMPSN:1.5K OHM,5%,0.25W	01121	CB1525
R49	315-0105-00	B010100	B129999	RES.,FXD,CMPSN:1M OHM,5%,0.25W	01121	CB1055
R49	315-0104-00	B130000		RES.,FXD,CMPSN:100K OHM,5%,0.25W	01121	CB1045
R51	321-0193-00			RES.,FXD,FILM:1K OHM,1%,0.125W	75042	CEAT0-1001F
R53	315-0223-00			RES.,FXD,CMPSN:22K OHM,5%,0.25W	01121	CB2235
R54	321-0193-00			RES.,FXD,FILM:1K OHM,1%,0.125W	75042	CEAT0-1001F
R55	315-0470-00	B010100	B099999X	RES.,FXD,CMPSN:47 OHM,5%,0.25W	01121	CB4705
R56	315-0471-00	B010100	B099999	RES.,FXD,CMPSN:470 OHM,5%,0.25W	01121	CB4715
R56	321-0169-00	B100000		RES.,FXD,FILM:562 OHM,1%,0.125W	75042	CEAT0-5620F
R57	315-0682-00	B010100	B099999	RES.,FXD,CMPSN:6.8K OHM,5%,0.25W	01121	CB6825
R57	321-0266-00	B100000		RES.,FXD,FILM:5.76K OHM,1%,0.125W	75042	CEAT0-5761F
R58	315-0101-00			RES.,FXD,CMPSN:100 OHM,5%,0.25W	01121	CB1015
R59	315-0103-00	B010100	B099999	RES.,FXD,CMPSN:10K OHM,5%,0.25W	01121	CB1035
R59	321-0282-00	B100000		RES.,FXD,FILM:8.45K OHM,1%,0.125W	75042	CEAT0-8451F
R61	315-0512-00			RES.,FXD,CMPSN:5.1K OHM,5%,0.25W	01121	CB5125
R62	315-0103-00			RES.,FXD,CMPSN:10K OHM,5%,0.25W	01121	CB1035
R63	315-0102-00			RES.,FXD,CMPSN:1K OHM,5%,0.25W	01121	CB1025
R67	315-0512-00			RES.,FXD,CMPSN:5.1K OHM,5%,0.25W	01121	CB5125
R74	315-0510-00			RES.,FXD,CMPSN:51 OHM,5%,0.25W	01121	CB5105
R76	315-0222-00			RES.,FXD,CMPSN:2.2K OHM,5%,0.25W	01121	CB2225
R77	315-0392-00	B010100	B099999	RES.,FXD,CMPSN:3.9K OHM,5%,0.25W	01121	CB3925
R77	315-0362-00	B100000		RES.,FXD,CMPSN:3.6K OHM,5%,0.25W	01121	CB3625
R78	315-0392-00			RES.,FXD,CMPSN:3.9K OHM,5%,0.25W	01121	CB3925
R80	321-0258-00			RES.,FXD,FILM:4.75K OHM,1%,0.125W	75042	CEAT0-4751F
R82	315-0510-00			RES.,FXD,CMPSN:51 OHM,5%,0.25W	01121	CB5105
R83	315-0510-00			RES.,FXD,CMPSN:51 OHM,5%,0.25W	01121	CB5105
R84	315-0510-00			RES.,FXD,CMPSN:51 OHM,5%,0.25W	01121	CB5105
R85	315-0471-00			RES.,FXD,CMPSN:470 OHM,5%,0.25W	01121	CB4715
R86	315-0100-00			RES.,FXD,CMPSN:10 OHM,5%,0.25W	01121	CB1005
R88	321-0230-00			RES.,FXD,FILM:2.43K OHM,1%,0.125W	75042	CEAT0-2431F
R89	315-0910-00			RES.,FXD,CMPSN:91 OHM,5%,0.25W	01121	CB9105
R90	315-0362-00			RES.,FXD,CMPSN:3.6K OHM,5%,0.25W	01121	CB3625
R92	321-0202-00			RES.,FXD,FILM:1.24K OHM,1%,0.125W	75042	CEAT0-1241F
R93	315-0102-00			RES.,FXD,CMPSN:1K OHM,5%,0.25W	01121	CB1025
R95	315-0152-00			RES.,FXD,CMPSN:1.5K OHM,5%,0.25W	01121	CB1525
R96	315-0511-00			RES.,FXD,CMPSN:510 OHM,5%,0.25W	01121	CB5115
R98	315-0511-00			RES.,FXD,CMPSN:510 OHM,5%,0.25W	01121	CB5115
R99	315-0221-00			RES.,FXD,CMPSN:220 OHM,5%,0.25W	01121	CB2215
R101	315-0302-00			RES.,FXD,CMPSN:3K OHM,5%,0.25W	01121	CB3025
R102A, R102B [1]	311-1404-00			RES.,VAR,NONWIR:5K OHM X 5K OHM,20%,1W	01121	13M039
R104	315-0103-00			RES.,FXD,CMPSN:10K OHM,5%,0.25W	01121	CB1035
R105	315-0472-00			RES.,FXD,CMPSN:4.7K OHM,5%,0.25W	01121	CB4725
R106	315-0273-00			RES.,FXD,CMPSN:27K OHM,5%,0.25W	01121	CB2735
R109	321-0243-00			RES.,FXD,FILM:3.32K OHM,1%,0.125W	75042	CEAT0-3321F
R110	321-0097-00			RES.,FXD,FILM:100 OHM,1%,0.125W	75042	CEAT0-1000F
R112	321-0097-00			RES.,FXD,FILM:100 OHM,1%,0.125W	75042	CEAT0-1000F
R123	315-0102-00			RES.,FXD,CMPSN:1K OHM,5%,0.25W	01121	CB1025
R124	315-0511-00			RES.,FXD,CMPSN:510 OHM,5%,0.25W	01121	CB5115

[1] Furnished as a unit with S102.

http://manoman.sqhill.com

Ckt No.	Tektronix Part No.	Serial/Model No. Eff	Dscont	Name & Description	Mfr Code	Mfr Part Number
R125	315-0102-00			RES.,FXD,CMPSN:1K OHM,5%,0.25W	01121	CB1025
R126	315-0102-00			RES.,FXD,CMPSN:1K OHM,5%,0.25W	01121	CB1025
R130	315-0102-00			RES.,FXD,CMPSN:1K OHM,5%,0.25W	01121	CB1025
R132	315-0222-00			RES.,FXD,CMPSN:2.2K OHM,5%,0.25W	01121	CB2225
R133	315-0102-00			RES.,FXD,CMPSN:1K OHM,5%,0.25W	01121	CB1025
R134	315-0821-00			RES.,FXD,CMPSN:820 OHM,5%,0.25W	01121	CB8215
R135	315-0123-00			RES.,FXD,CMPSN:12K OHM,5%,0.25W	01121	CB1235
R136	315-0681-00			RES.,FXD,CMPSN:680 OHM,5%,0.25W	01121	CB6815
R137	315-0221-00			RES.,FXD,CMPSN:220 OHM,5%,0.25W	01121	CB2215
R138	315-0472-00			RES.,FXD,CMPSN:4.7K OHM,5%,0.25W	01121	CB4725
R140	315-0391-00			RES.,FXD,CMPSN:390 OHM,5%,0.25W	01121	CB3915
R141	315-0122-00			RES.,FXD,CMPSN:1.2K OHM,5%,0.25W	01121	CB1225
R142	315-0222-00			RES.,FXD,CMPSN:2.2K OHM,5%,0.25W	01121	CB2225
R143	315-0102-00			RES.,FXD,CMPSN:1K OHM,5%,0.25W	01121	CB1025
R144	315-0821-00			RES.,FXD,CMPSN:820 OHM,5%,0.25W	01121	CB8215
R145	315-0123-00			RES.,FXD,CMPSN:12K OHM,5%,0.25W	01121	CB1235
R146	315-0681-00			RES.,FXD,CMPSN:680 OHM,5%,0.25W	01121	CB6815
R147	315-0181-00			RES.,FXD,CMPSN:180 OHM,5%,0.25W	01121	CB1815
R148	315-0472-00			RES.,FXD,CMPSN:4.7K OHM,5%,0.25W	01121	CB4725
R149	315-0100-00			RES.,FXD,CMPSN:10 OHM,5%,0.25W	01121	CB1005
R150	315-0103-00			RES.,FXD,CMPSN:10K OHM,5%,0.25W	01121	CB1035
R152	315-0101-00			RES.,FXD,CMPSN:100 OHM,5%,0.25W	01121	CB1015
R154	315-0223-00			RES.,FXD,CMPSN:22K OHM,5%,0.25W	01121	CB2235
R155	315-0391-00			RES.,FXD,CMPSN:390 OHM,5%,0.25W	01121	CB3915
R157	315-0102-00			RES.,FXD,CMPSN:1K OHM,5%,0.25W	01121	CB1025
R159	315-0510-00			RES.,FXD,CMPSN:51 OHM,5%,0.25W	01121	CB5105
R160	315-0391-00			RES.,FXD,CMPSN:390 OHM,5%,0.25W	01121	CB3915
R161	315-0122-00			RES.,FXD,CMPSN:1.2K OHM,5%,0.25W	01121	CB1225
R162	315-0222-00			RES.,FXD,CMPSN:2.2K OHM,5%,0.25W	01121	CB2225
R163	315-0102-00			RES.,FXD,CMPSN:1K OHM,5%,0.25W	01121	CB1025
R164	315-0821-00			RES.,FXD,CMPSN:820 OHM,5%,0.25W	01121	CB8215
R165	315-0123-00			RES.,FXD,CMPSN:12K OHM,5%,0.25W	01121	CB1235
R166	315-0681-00			RES.,FXD,CMPSN:680 OHM,5%,0.25W	01121	CB6815
R168	315-0472-00			RES.,FXD,CMPSN:4.7K OHM,5%,0.25W	01121	CB4725
R200	321-1068-02			RES.,FXD,FILM:50.5 OHM,0.5%,0.125W	75042	CEAT2-50R50D
R202	321-1068-02			RES.,FXD,FILM:50.5 OHM,0.5%,0.125W	75042	CEAT2-50R50D
R204	321-1068-02			RES.,FXD,FILM:50.5 OHM,0.5%,0.125W	75042	CEAT2-50R50D
R206	321-1068-02			RES.,FXD,FILM:50.5 OHM,0.5%,0.125W	75042	CEAT2-50R50D
R208	315-0393-00			RES.,FXD,CMPSN:39K OHM,5%,0.25W	01121	CB3935
R209	321-0741-02			RES.,FXD,FILM:40.9 OHM,0.5%,0.125W	75042	CEAT2-40R90D
R211	322-0197-00			RES.,FXD,FILM:1.1K OHM,1%,0.25W	75042	CEBT0-1101F
R212	321-0741-02			RES.,FXD,FILM:40.9 OHM,0.5%,0.125W	75042	CEAT2-40R90D
R214	322-0212-00			RES.,FXD,FILM:1.58K OHM,1%,0.25W	75042	CEBT0-1581F
R215	315-0393-00			RES.,FXD,CMPSN:39K OHM,5%,0.25W	01121	CB3935
R216	321-0741-02			RES.,FXD,FILM:40.9 OHM,0.5%,0.125W	75042	CEAT2-40R90D
R218	322-0197-00			RES.,FXD,FILM:1.1K OHM,1%,0.25W	75042	CEBT0-1101F
R219	321-0741-02			RES.,FXD,FILM:40.9 OHM,0.5%,0.125W	75042	CEAT2-40R90D
R222	315-0330-00			RES.,FXD,CMPSN:33 OHM,5%,0.25W	01121	CB3305
R224	315-0330-00			RES.,FXD,CMPSN:33 OHM,5%,0.25W	01121	CB3305
R225	315-0911-00			RES.,FXD,CMPSN:910 OHM,5%,0.25W	01121	CB9115
R226	321-0069-00			RES.,FXD,FILM:51.1 OHM,1%,0.125W	75042	CEAT0-51R10F
R228	321-0060-00			RES.,FXD,FILM:41.2 OHM,1%,0.125W	75042	CEAT0-41R20F
R230	321-0236-00			RES.,FXD,FILM:2.8K OHM,1%,0.125W	75042	CEAT0-2801F

http://manoman.sqhill.com

Ckt No.	Tektronix Part No.	Serial/Model No. Eff	Dscont	Name & Description	Mfr Code	Mfr Part Number
R232	321-0060-00			RES.,FXD,FILM:41.2 OHM,1%,0.125W	75042	CEAT0-41R20F
R234	321-0069-00			RES.,FXD,FILM:51.1 OHM,1%,0.125W	75042	CEAT0-51R10F
R236	315-0911-00			RES.,FXD,CMPSN:910 OHM,5%,0.25W	01121	CB9115
R238	315-0912-00			RES.,FXD,CMPSN:9.1K OHM,5%,0.25W	01121	CB9125
R240	323-0149-00			RES.,FXD,FILM:348 OHM,1%,0.50W	75042	CECT0-3480F
R241	321-0212-00			RES.,FXD,FILM:1.58K OHM,1%,0.125W	75042	CEAT0-1581F
R244	315-0101-00			RES.,FXD,CMPSN:100 OHM,5%,0.25W	01121	CB1015
R246	315-0331-00			RES.,FXD,CMPSN:330 OHM,5%,0.25W	01121	CB3315
R250	323-0149-00			RES.,FXD,FILM:348 OHM,1%,0.50W	75042	CECT0-3480F
R251	321-0212-00			RES.,FXD,FILM:1.58K OHM,1%,0.125W	75042	CEAT0-1581F
R254	315-0101-00			RES.,FXD,CMPSN:100 OHM,5%,0.25W	01121	CB1015
R259	321-0069-00			RES.,FXD,FILM:51.1 OHM,1%,0.125W	75042	CEAT0-51R10F
R261	321-0069-00			RES.,FXD,FILM:51.1 OHM,1%,0.125W	75042	CEAT0-51R10F
R301	307-0106-00			RES.,FXD,CMPSN:4.7 OHM,5%,0.25W	01121	CB47G5
R303	307-0106-00			RES.,FXD,CMPSN:4.7 OHM,5%,0.25W	01121	CB47G5
R305	307-0103-00			RES.,FXD,CMPSN:2.7 OHM,5%,0.25W	01121	CB27G5
R307	321-0069-00			RES.,FXD,FILM:51.1 OHM,1%,0.125W	75042	CEAT0-51R10F
R308	321-0069-00			RES.,FXD,FILM:51.1 OHM,1%,0.125W	75042	CEAT0-51R10F
R310	315-0103-00			RES.,FXD,CMPSN:10K OHM,5%,0.25W	01121	CB1035
R312	315-0562-00			RES.,FXD,CMPSN:5.6K OHM,5%,0.25W	01121	CB5625
R314	315-0103-00			RES.,FXD,CMPSN:10K OHM,5%,0.25W	01121	CB1035
R315	315-0513-00			RES.,FXD,CMPSN:51K OHM,5%,0.25W	01121	CB5135
R317	321-0069-00			RES.,FXD,FILM:51.1 OHM,1%,0.125W	75042	CEAT0-51R10F
R319	321-0069-00			RES.,FXD,FILM:51.1 OHM,1%,0.125W	75042	CEAT0-51R10F
R320	321-0218-00			RES.,FXD,FILM:1.82K OHM,1%,0.125W	75042	CEAT0-1821F
R321	321-0061-00			RES.,FXD,FILM:42.2 OHM,1%,0.125W	75042	CEAT0-42R20F
R322	315-0101-00			RES.,FXD,CMPSN:100 OHM,5%,0.25W	01121	CB1015
R323	321-0061-00			RES.,FXD,FILM:42.2 OHM,1%,0.125W	75042	CEAT0-42R20F
R324	322-0184-00			RES.,FXD,FILM:806 OHM,1%,0.25W	75042	CEBT0-8060F
R326	321-0061-00			RES.,FXD,FILM:42.2 OHM,1%,0.125W	75042	CEAT0-42R20F
R327	322-0184-00			RES.,FXD,FILM:806 OHM,1%,0.25W	75042	CEBT0-8060F
R328	321-0061-00			RES.,FXD,FILM:42.2 OHM,1%,0.125W	75042	CEAT0-42R20F
R329	315-0101-00			RES.,FXD,CMPSN:100 OHM,5%,0.25W	01121	CB1015
R330	321-0049-00			RES.,FXD,FILM:31.6 OHM,1%,0.125W	75042	CEAT0-31R60F
R332	321-0220-00			RES.,FXD,FILM:1.91K OHM,1%,0.125W	75042	CEAT0-1911F
R333	321-0143-00			RES.,FXD,FILM:301 OHM,1%,0.125W	75042	CEAT0-3010F
R334	321-0082-00			RES.,FXD,FILM:69.8 OHM,1%,0.125W	75042	CEAT0-69R80F
R335	321-0049-00			RES.,FXD,FILM:31.6 OHM,1%,0.125W	75042	CEAT0-31R60F
R336	321-0129-00			RES.,FXD,FILM:215 OHM,1%,0.125W	75042	CEAT0-2150F
R337	321-0129-00			RES.,FXD,FILM:215 OHM,1%,0.125W	75042	CEAT0-2150F
R338	321-0069-00			RES.,FXD,FILM:51.1 OHM,1%,0.125W	75042	CEAT0-51R10F
R339	321-0069-00			RES.,FXD,FILM:51.1 OHM,1%,0.125W	75042	CEAT0-51R10F
R340	321-0214-00			RES.,FXD,FILM:1.65K OHM,1%,0.125W	75042	CEAT0-1651F
R341	315-0680-00			RES.,FXD,CMPSN:68 OHM,5%,0.25W	01121	CB6805
R342	315-0331-00			RES.,FXD,CMPSN:330 OHM,5%,0.25W	01121	CB3315
R344	321-0040-00			RES.,FXD,FILM:25.5 OHM,1%,0.125W	75042	CEAT0-25R5F
R345	315-0561-00			RES.,FXD,CMPSN:560 OHM,5%,0.25W	01121	CB5615
R346	321-0040-00			RES.,FXD,FILM:25.5 OHM,1%,0.125W	75042	CEAT0-25R5F
R348	315-0331-00			RES.,FXD,CMPSN:330 OHM,5%,0.25W	01121	CB3315
R349	315-0680-00			RES.,FXD,CMPSN:68 OHM,5%,0.25W	01121	CB6805
R350	321-0214-00			RES.,FXD,FILM:1.65K OHM,1%,0.125W	75042	CEAT0-1651F
R352	315-0430-00			RES.,FXD,CMPSN:43 OHM,5%,0.25W	01121	CB4305
R401	321-0068-00			RES.,FXD,FILM:49.9 OHM,1%,0.125W	75042	CEAT0-49R90F

http://manoman.sqhill.com

Ckt No.	Tektronix Part No.	Serial/Model No. Eff	Dscont	Name & Description	Mfr Code	Mfr Part Number
R403	321-0068-00			RES.,FXD,FILM:49.9 OHM,1%,0.125W	75042	CEAT0-49R90F
R405	311-1263-00	B010100	B049999	RES.,VAR,NONWIR:1K OHM,10%,0.50W	73138	62PT-347-0
R405	311-0635-00	B050000		RES.,VAR,NONWIR:1K OHM,10%,0.50W	80740	62-56-3
R407	315-0203-00			RES.,FXD,CMPSN:20K OHM,5%,0.25W	01121	CB2035
R409	315-0272-00			RES.,FXD,CMPSN:2.7K OHM,5%,0.25W	01121	CB2725
R411	315-0153-00			RES.,FXD,CMPSN:15K OHM,5%,0.25W	01121	CB1535
R413	315-0124-00			RES.,FXD,CMPSN:120K OHM,5%,0.25W	01121	CB1245
R415	321-0612-00			RES.,FXD,FILM:500 OHM,1%,0.125W	91637	MFF1816D5000F
R416	321-0365-00			RES.,FXD,FILM:61.9K OHM,1%,0.125W	75042	CEAT0-6192F
R417	321-0222-00			RES.,FXD,FILM:2K OHM,1%,0.125W	75042	CEAT0-2001F
R419	321-0612-00			RES.,FXD,FILM:500 OHM,1%,0.125W	91637	MFF1816D5000F
R422	315-0331-00			RES.,FXD,CMPSN:330 OHM,5%,0.25W	01121	CB3315
R426	321-0163-00			RES.,FXD,FILM:487 OHM,1%,0.125W	75042	CEAT0-4870F
R427	311-0622-00			RES.,VAR,NONWIR:100 OHM,10%,0.50W	80740	62-53-5
R428	321-0163-00			RES.,FXD,FILM:487 OHM,1%,0.125W	75042	CEAT0-4870F
R430	321-0612-00			RES.,FXD,FILM:500 OHM,1%,0.125W	91637	MFF1816D5000F
R433	321-0612-00			RES.,FXD,FILM:500 OHM,1%,0.125W	91637	MFF1816D5000F
R435	315-0272-00			RES.,FXD,CMPSN:2.7K OHM,5%,0.25W	01121	CB2725
R437	321-0109-00			RES.,FXD,FILM:133 OHM,1%,0.125W	75042	CEAT0-1330F
R438	315-0152-00			RES.,FXD,CMPSN:1.5K OHM,5%,0.25W	01121	CB1525
R440	315-0272-00			RES.,FXD,CMPSN:2.7K OHM,5%,0.25W	01121	CB2725
R443	315-0822-00			RES.,FXD,CMPSN:8.2K OHM,5%,0.25W	01121	CB8225
R447	315-0152-00			RES.,FXD,CMPSN:1.5K OHM,5%,0.25W	01121	CB1525
R449	315-0152-00			RES.,FXD,CMPSN:1.5K OHM,5%,0.25W	01121	CB1525
R451	315-0560-00			RES.,FXD,CMPSN:56 OHM,5%,0.25W	01121	CB5605
R453	315-0560-00			RES.,FXD,CMPSN:56 OHM,5%,0.25W	01121	CB5605
R454	315-0471-00			RES.,FXD,CMPSN:470 OHM,5%,0.25W	01121	CB4715
R455	315-0152-00			RES.,FXD,CMPSN:1.5K OHM,5%,0.25W	01121	CB1525
R457	308-0387-00			RES.,FXD,WW:178 OHM,1%,3W	56289	223EX178ROFQ108
R458	311-0643-00			RES.,VAR,NONWIR:50 OHM,10%,0.50W	80740	62-52-3
R460	315-0110-00			RES.,FXD,CMPSN:11 OHM,5%,0.25W	01121	CB1105
R461	315-0560-00			RES.,FXD,CMPSN:56 OHM,5%,0.25W	01121	CB5605
R463	315-0560-00			RES.,FXD,CMPSN:56 OHM,5%,0.25W	01121	CB5605
R465	315-0152-00			RES.,FXD,CMPSN:1.5K OHM,5%,0.25W	01121	CB1525
R467	308-0387-00			RES.,FXD,WW:178 OHM,1%,3W	56289	223EX178ROFQ108
R468	321-0086-00			RES.,FXD,FILM:76.8 OHM,1%,0.125W	75042	CEAT0-76R80F
R470	315-0270-00			RES.,FXD,CMPSN:27 OHM,5%,0.25W	01121	CB2705
R473	310-0694-00			RES.,FXD,WW:1.25K OHM,1%,10W	80009	310-0694-00
R474	315-0270-00			RES.,FXD,CMPSN:27 OHM,5%,0.25W	01121	CB2705
R477	303-0270-00			RES.,FXD,CMPSN:27 OHM,5%,1W	01121	GB2705
R483	310-0694-00			RES.,FXD,WW:1.25K OHM,1%,10W	80009	310-0694-00
R492	307-0103-00			RES.,FXD,CMPSN:2.7 OHM,5%,0.25W	01121	CB27G5
R494	307-0103-00			RES.,FXD,CMPSN:2.7 OHM,5%,0.25W	01121	CB27G5
R501	321-0069-00			RES.,FXD,FILM:51.1 OHM,1%,0.125W	75042	CEAT0-51R10F
R502	315-0100-00			RES.,FXD,CMPSN:10 OHM,5%,0.25W	01121	CB1005
R503	321-0069-00			RES.,FXD,FILM:51.1 OHM,1%,0.125W	75042	CEAT0-51R10F
R505	321-0069-00			RES.,FXD,FILM:51.1 OHM,1%,0.125W	75042	CEAT0-51R10F
R506	321-0291-00	B010100	B029999	RES.,FXD,FILM:10.5K OHM,1%,0.125W	75042	CEAT0-1052F
R506	321-0297-00	B030000		RES.,FXD,FILM:12.1K OHM,1%,0.125W	75042	CEAT0-1212F
R508	321-0184-00			RES.,FXD,FILM:806 OHM,1%,0.125W	75042	CEAT0-8060F
R509	321-0069-00			RES.,FXD,FILM:51.1 OHM,1%,0.125W	75042	CEAT0-51R10F
R510	315-0104-00			RES.,FXD,CMPSN:100K OHM,5%,0.25W	01121	CB1045
R511	321-0149-00			RES.,FXD,FILM:348 OHM,1%,0.125W	75042	CEAT0-3480F

http://manoman.sqhill.com

Ckt No.	Tektronix Part No.	Serial/Model No. Eff	Dscont	Name & Description	Mfr Code	Mfr Part Number
R512	311-1224-00			RES.,VAR,NONWIR:500 OHM,20%,0.50W	80294	3386F-T04-501
R513	321-0141-00			RES.,FXD,FILM:287 OHM,1%,0.125W	75042	CEAT0-2870F
R514	321-0241-00			RES.,FXD,FILM:3.16K OHM,1%,0.125W	75042	CEAT0-3161F
R515	321-0241-00			RES.,FXD,FILM:3.16K OHM,1%,0.125W	75042	CEAT0-3161F
R517	321-0212-00			RES.,FXD,FILM:1.58K OHM,1%,0.125W	75042	CEAT0-1581F
R519	321-0110-00	B010100	B029999	RES.,FXD,FILM:137 OHM,1%,0.125W	75042	CEAT0-1370F
R519	321-0110-00	B030000		RES.,FXD,FILM:137 OHM,(NOM VALUE),SEL	75042	CEAT0-1370F
R521	321-0257-00			RES.,FXD,FILM:4.64K OHM,1%,0.125W	75042	CEAT0-4641F
R522	321-0257-00			RES.,FXD,FILM:4.64K OHM,1%,0.125W	75042	CEAT0-4641F
R523	321-0289-00			RES.,FXD,FILM:10K OHM,1%,0.125W	75042	CEAT0-1002F
R524	321-0212-00			RES.,FXD,FILM:1.58K OHM,1%,0.125W	75042	CEAT0-1581F
R525	311-1223-00			RES.,VAR,NONWIR:250 OHM,10%,0.50W	80294	3386F-T04-251
R526	321-0212-00			RES.,FXD,FILM:1.58K OHM,1%,0.125W	75042	CEAT0-1581F
R529	315-0473-00			RES.,FXD,CMPSN:47K OHM,5%,0.25W	01121	CB4735
R531	321-0242-00			RES.,FXD,FILM:3.24K OHM,1%,0.125W	75042	CEAT0-3241F
R532	321-0242-00			RES.,FXD,FILM:3.24K OHM,1%,0.125W	75042	CEAT0-3241F
R537	315-0103-00			RES.,FXD,CMPSN:10K OHM,5%,0.25W	01121	CB1035
R538	311-1230-00			RES.,VAR,NONWIR:20K OHM,20%,0.50W	80294	3386F-T04-203
R539	315-0103-00			RES.,FXD,CMPSN:10K OHM,5%,0.25W	01121	CB1035
R541	301-0271-00			RES.,FXD,CMPSN:270 OHM,5%,0.50W	01121	EB2715
R544	303-0563-00			RES.,FXD,CMPSN:56K OHM,5%,1W	01121	GB5635
R545	321-0244-00			RES.,FXD,FILM:3.4K OHM,1%,0.125W	75042	CEAT0-3401F
R546	315-0471-00			RES.,FXD,CMPSN:470 OHM,5%,0.25W	01121	CB4715
R548	323-0188-00			RES.,FXD,FILM:887 OHM,1%,0.50W	75042	CECT0-8870F
R549	324-0356-00			RES.,FXD,FILM:49.9K OHM,1%,1W	75042	CCFT0-4992F
R551	301-0361-00			RES.,FXD,CMPSN:360 OHM,5%,0.50W	01121	EB3615
R553	301-0181-00			RES.,FXD,CMPSN:180 OHM,5%,0.50W	01121	EB1815
R556	321-0256-00			RES.,FXD,FILM:4.53K OHM,1%,0.125W	75042	CEAT0-4531F
R557	321-0236-00			RES.,FXD,FILM:2.8K OHM,1%,0.125W	75042	CEAT0-2801F
R559	301-0224-00			RES.,FXD,CMPSN:220K OHM,5%,0.50W	01121	EB2245
R562	321-0143-00			RES.,FXD,FILM:301 OHM,1%,0.125W	75042	CEAT0-3010F
R564	303-0563-00			RES.,FXD,CMPSN:56K OHM,5%,1W	01121	GB5635
R565	321-0244-00			RES.,FXD,FILM:3.4K OHM,1%,0.125W	75042	CEAT0-3401F
R566	315-0471-00			RES.,FXD,CMPSN:470 OHM,5%,0.25W	01121	CB4715
R568	323-0188-00			RES.,FXD,FILM:887 OHM,1%,0.50W	75042	CECT0-8870F
R569	324-0356-00			RES.,FXD,FILM:49.9K OHM,1%,1W	75042	CCFT0-4992F
R571	315-0101-00			RES.,FXD,CMPSN:100 OHM,5%,0.25W	01121	CB1015
R573	315-0101-00			RES.,FXD,CMPSN:100 OHM,5%,0.25W	01121	CB1015
R591	315-0100-00			RES.,FXD,CMPSN:10 OHM,5%,0.25W	01121	CB1005
R595	307-0106-00			RES.,FXD,CMPSN:4.7 OHM,5%,0.25W	01121	CB47G5
R597	307-0106-00			RES.,FXD,CMPSN:4.7 OHM,5%,0.25W	01121	CB47G5
R599	307-0106-00			RES.,FXD,CMPSN:4.7 OHM,5%,0.25W	01121	CB47G5
R602	315-0101-00			RES.,FXD,CMPSN:100 OHM,5%,0.25W	01121	CB1015
R605	315-0561-00			RES.,FXD,CMPSN:560 OHM,5%,0.25W	01121	CB5615
R607	321-0020-00			RES.,FXD,FILM:15.8 OHM,1%,0.125W	75042	CEAT0-15R80F
R608	321-0089-00			RES.,FXD,FILM:82.5 OHM,1%,0.125W	75042	CEAT0-82R50F
R610	307-0106-00			RES.,FXD,CMPSN:4.7 OHM,5%,0.25W	01121	CB47G5
R612	321-0193-00	B010100	B221809	RES.,FXD,FILM:1K OHM,1%,0.125W	75042	CEAT0-1001F
R612	321-0612-00	B221810		RES.,FXD,FILM:500 OHM,1%,0.125W	91637	MFF1816D5000F
R613	321-0222-00	B010100	B221809	RES.,FXD,FILM:2K OHM,1%,0.125W	75042	CEAT0-2001F
R613	321-0193-00	B221810		RES.,FXD,FILM:1K OHM,1%,0.125W	75042	CEAT0-1001F
R615	315-0240-00			RES.,FXD,CMPSN:24 OHM,5%,0.25W	01121	CB2405
R617	321-0020-00			RES.,FXD,FILM:15.8 OHM,1%,0.125W	75042	CEAT0-15R80F
R619	315-0101-00			RES.,FXD,CMPSN:100 OHM,5%,0.25W	01121	CB1015
R622	321-0208-00			RES.,FXD,FILM:1.43K OHM,1%,0.125W	75042	CEAT0-1431F

http://manoman.sqhill.com

Ckt No.	Tektronix Part No.	Serial/Model No. Eff	Dscont	Name & Description	Mfr Code	Mfr Part Number
R623	307-0106-00			RES.,FXD,CMPSN:4.7 OHM,5%,0.25W	01121	CB47G5
R625	321-0224-00			RES.,FXD,FILM:2.1K OHM,1%,0.125W	75042	CEAT0-2101F
R627	315-0101-00			RES.,FXD,CMPSN:100 OHM,5%,0.25W	01121	CB1015
R630	315-0101-00			RES.,FXD,CMPSN:100 OHM,5%,0.25W	01121	CB1015
R633	315-0222-00			RES.,FXD,CMPSN:2.2K OHM,5%,0.25W	01121	CB2225
R636	315-0241-00			RES.,FXD,CMPSN:240 OHM,5%,0.25W	01121	CB2415
R637	315-0152-00			RES.,FXD,CMPSN:1.5K OHM,5%,0.25W	01121	CB1525
R639	315-0101-00			RES.,FXD,CMPSN:100 OHM,5%,0.25W	01121	CB1015
R641	315-0272-00			RES.,FXD,CMPSN:2.7K OHM,5%,0.25W	01121	CB2725
R643	315-0220-00			RES.,FXD,CMPSN:22 OHM,5%,0.25W	01121	CB2205
R645	321-0260-00			RES.,FXD,FILM:4.99K OHM,1%,0.125W	75042	CEAT0-4991F
R647	321-0190-00			RES.,FXD,FILM:931 OHM,1%,0.125W	75042	CEAT0-9310F
R651	315-0201-00			RES.,FXD,CMPSN:200 OHM,5%,0.25W	01121	CB2015
R652	315-0123-00			RES.,FXD,CMPSN:12K OHM,5%,0.25W	01121	CB1235
R654	315-0201-00			RES.,FXD,CMPSN:200 OHM,5%,0.25W	01121	CB2015
R655	315-0123-00			RES.,FXD,CMPSN:12K OHM,5%,0.25W	01121	CB1235
R657	315-0201-00			RES.,FXD,CMPSN:200 OHM,5%,0.25W	01121	CB2015
R658	315-0123-00			RES.,FXD,CMPSN:12K OHM,5%,0.25W	01121	CB1235
R660	315-0101-00			RES.,FXD,CMPSN:100 OHM,5%,0.25W	01121	CB1015
R662	315-0821-00			RES.,FXD,CMPSN:820 OHM,5%,0.25W	01121	CB8215
R663	321-0193-00			RES.,FXD,FILM:1K OHM,1%,0.125W	75042	CEAT0-1001F
R667	315-0561-00			RES.,FXD,CMPSN:560 OHM,5%,0.25W	01121	CB5615
R669	307-0106-00			RES.,FXD,CMPSN:4.7 OHM,5%,0.25W	01121	CB47G5
R670	321-0143-00			RES.,FXD,FILM:301 OHM,1%,0.125W	75042	CEAT0-3010F
R672	321-0180-00			RES.,FXD,FILM:732 OHM,1%,0.125W	75042	CEAT0-7320F
R673	321-0226-00			RES.,FXD,FILM:2.21K OHM,1%,0.125W	75042	CEAT0-2211F
R675	321-0189-00			RES.,FXD,FILM:909 OHM,1%,0.125W	75042	CEAT0-9090F
R677	315-0390-00			RES.,FXD,CMPSN:39 OHM,5%,0.25W	01121	CB3905
R679	307-0106-00			RES.,FXD,CMPSN:4.7 OHM,5%,0.25W	01121	CB47G5
R805	307-0113-00	B010100	B109999X	RES.,FXD,CMPSN:5.1 OHM,5%,0.25W	01121	CB51G5
R806	302-0473-00			RES.,FXD,CMPSN:47K OHM,10%,0.50W	01121	EB4731
R808	302-0223-00			RES.,FXD,CMPSN:22K OHM,10%,0.50W	01121	EB2231
R809	302-0223-00			RES.,FXD,CMPSN:22K OHM,10%,0.50W	01121	EB2231
R811	302-0472-00			RES.,FXD,CMPSN:4.7K OHM,10%,050W	01121	EB4721
R814	302-0472-00			RES.,FXD,CMPSN:4.7K OHM,10%,050W	01121	EB4721
R821	302-0472-00			RES.,FXD,CMPSN:4.7K OHM,10%,050W	01121	EB4721
R822	315-0102-00			RES.,FXD,CMPSN:1K OHM,5%,0.25W	01121	CB1025
R823	315-0151-00			RES.,FXD,CMPSN:150 OHM,5%,0.25W	01121	CB1515
R824	315-0470-00			RES.,FXD,CMPSN:47 OHM,5%,0.25W	01121	CB4705
R826	315-0302-00			RES.,FXD,CMPSN:3K OHM,5%,0.25W	01121	CB3025
R827	315-0472-00			RES.,FXD,CMPSN:4.7K OHM,5%,0.25W	01121	CB4725
R830	315-0911-00			RES.,FXD,CMPSN:910 OHM,5%,0.25W	01121	CB9115
R831	315-0392-00			RES.,FXD,CMPSN:3.9K OHM,5%,0.25W	01121	CB3925
R833	315-0683-00			RES.,FXD,CMPSN:68K OHM,5%,0.25W	01121	CB6835
R837	307-0054-00			RES.,FXD,CMPSN:3.6 OHM,5%,0.50W	01121	EB36GB
R838	307-0054-00			RES.,FXD,CMPSN:3.6 OHM,5%,0.50W	01121	EB36GB
R853	315-0473-00			RES.,FXD,CMPSN:47K OHM,5%,0.25W	01121	CB4735
R855	323-0309-00			RES.,FXD,FILM:16.2K OHM,1%,0.50W	75042	CECT0-1622F
R856	323-0289-00			RES.,FXD,FILM:10K OHM,1%,0.50W	75042	CECT0-1002F
R858	321-0924-07			RES.,FXD,FILM:40K OHM,0.1%,0.125W	75042	CEAT9-4002B
R859	321-0924-07			RES.,FXD,FILM:40K OHM,0.1%,0.125W	75042	CEAT9-4002B
R860	315-0684-00			RES.,FXD,CMPSN:680K OHM,5%,0.25W	01121	CB6845
R862	315-0204-00			RES.,FXD,CMPSN:200K OHM,5%,0.25W	01121	CB2045

http://manoman.sqhill.com

Ckt No.	Tektronix Part No.	Serial/Model No. Eff	Dscont	Name & Description	Mfr Code	Mfr Part Number
R864	315-0203-00			RES.,FXD,CMPSN:20K OHM,5%,0.25W	01121	CB2035
R866	315-0332-00			RES.,FXD,CMPSN:3.3K OHM,5%,0.25W	01121	CB3325
R867	315-0824-00			RES.,FXD,CMPSN:820K OHM,5%,0.25W	01121	CB8245
R870	315-0122-00			RES.,FXD,CMPSN:1.2K OHM,5%,0.25W	01121	CB1225
R872	315-0151-00			RES.,FXD,CMPSN:150 OHM,5%,0.25W	01121	CB1515
R875	308-0677-00			RES.,FXD,WW:1 OHM,5%,2W	75042	BWH-1R000J
R876	315-0154-00			RES.,FXD,CMPSN:150K OHM,5%,0.25W	01121	CB1545
R877	315-0511-00			RES.,FXD,CMPSN:510 OHM,5%,0.25W	01121	CB5115
R878	315-0104-00			RES.,FXD,CMPSN:100K OHM,5%,0.25W	01121	CB1045
R879	315-0124-00			RES.,FXD,CMPSN:120K OHM,5%,0.25W	01121	CB1245
R880	323-0272-00			RES.,FXD,FILM:6.65K OHM,1%,0.50W	75042	CECT0-6651F
R881	311-1223-00			RES.,VAR,NONWIR:250 OHM,10%,0.50W	80294	3386F-T04-251
R882	323-0206-00			RES.,FXD,FILM:1.37K OHM,1%,0.50W	75042	CECT0-1371F
R883	321-0223-00			RES.,FXD,FILM:2.05K OHM,1%,0.125W	75042	CEAT0-2051F
R884	323-0306-00			RES.,FXD,FILM:15K OHM,1%,0.50W	75042	CECT0-1502F
R886	315-0224-00			RES.,FXD,CMPSN:220K OHM,5%,0.25W	01121	CB2245
R889	315-0911-00			RES.,FXD,CMPSN:910 OHM,5%,0.25W	01121	CB9115
R890	323-0264-00			RES.,FXD,FILM:5.49K OHM,1%,0.50W	75042	CECT0-5491F
R891	315-0473-00			RES.,FXD,CMPSN:47K OHM,5%,0.25W	01121	CB4735
R892	315-0682-00			RES.,FXD,CMPSN:6.8K OHM,5%,0.25W	01121	CB6825
R894	315-0245-00			RES.,FXD,CMPSN:2.4M OHM,5%,0.25W	01121	CB2455
R896	301-0363-00			RES.,FXD,CMPSN:36K OHM,5%,0.50W	01121	EB3635
R898	315-0182-00			RES.,FXD,CMPSN:1.8K OHM,5%,0.25W	01121	CB1825
R901	315-0151-00			RES.,FXD,CMPSN:150 OHM,5%,0.25W	01121	CB1515
R903	308-0677-00			RES.,FXD,WW:1 OHM,5%,2W	75042	BWH-1R000J
R904	308-0679-00			RES.,FXD,WW:0.51 OHM,5%,2W	75042	BWH-R5100J
R906	315-0304-00			RES.,FXD,CMPSN:300K OHM,5%,0.25W	01121	CB3045
R907	315-0104-00	B010100	B099999	RES.,FXD,CMPSN:100K OHM,5%,0.25W	01121	CB1045
R907	315-0753-00	B100000		RES.,FXD,CMPSN:75K OHM,5%,0.25W	01121	CB7535
R908	315-0431-00			RES.,FXD,CMPSN:430 OHM,5%,0.25W	01121	CB4315
R910	315-0681-00			RES.,FXD,CMPSN:680 OHM,5%,0.25W	01121	CB6815
R911	315-0563-00			RES.,FXD,CMPSN:56K OHM,5%,0.25W	01121	CB5635
R912	315-0182-00			RES.,FXD,CMPSN:1.8K OHM,5%,0.25W	01121	CB1825
R915	321-1296-07			RES.,FXD,FILM:12K OHM,0.1%,0.125W	75042	CEAT9-1202B
R916	321-0924-07			RES.,FXD,FILM:40K OHM,0.1%,0.125W	75042	CEAT9-4002B
R918	301-0683-00			RES.,FXD,CMPSN:68K OHM,5%,0.50W	01121	EB6835
R921	315-0912-00			RES.,FXD,CMPSN:9.1K OHM,5%,0.25W	01121	CB9125
R922	315-0623-00			RES.,FXD,CMPSN:62K OHM,5%,0.25W	01121	CB6235
R923	315-0512-00			RES.,FXD,CMPSN:5.1K OHM,5%,0.25W	01121	CB5125
R924	315-0623-00			RES.,FXD,CMPSN:62K OHM,5%,0.25W	01121	CB6235
R927	315-0472-00			RES.,FXD,CMPSN:4.7K OHM,5%,0.25W	01121	CB4725
R932	315-0182-00			RES.,FXD,CMPSN:1.8K OHM,5%,0.25W	01121	CB1825
R935	308-0678-00			RES.,FXD,WW:0.1 OHM,5%,2W	75042	BWH-R1000J
R936	301-0273-00			RES.,FXD,CMPSN:27K OHM,5%,0.50W	01121	EB2735
R937	315-0361-00	B010100	B079999	RES.,FXD,CMPSN:360 OHM,5%,0.25W	01121	CB3615
R937	321-0151-00	B080000		RES.,FXD,FILM:365 OHM,1%,0.125W	75042	CEAT0-3650F
R938	315-0303-00	B010100	B079999	RES.,FXD,CMPSN:30K OHM,5%,0.25W	01121	CB3035
R938	321-0330-00	B080000		RES.,FXD,FILM:26.7K OHM,1%,0.125W	75042	CEAT0-2672F
R939	315-0184-00	B010100	B079999	RES.,FXD,CMPSN:180K OHM,5%,0.25W	01121	CB1845
R939	321-0409-00	B080000		RES.,FXD,FILM:178K OHM,1%,0.125W	75042	CEAT0-1783F
R940	315-0822-00			RES.,FXD,CMPSN:8.2K OHM,5%,0.25W	01121	CB8225
R942	315-0154-00			RES.,FXD,CMPSN:150K OHM,5%,0.25W	01121	CB1545
R945	321-0332-07			RES.,FXD,FILM:28K OHM,0.1%,0.125W	75042	CEAT9-2802B

http://manoman.sqhill.com

Ckt No.	Tektronix Part No.	Serial/Model No. Eff	Dscont	Name & Description	Mfr Code	Mfr Part Number
R946	321-1296-07			RES.,FXD,FILM:12K OHM,0.1%,0.125W	75042	CEAT9-1202B
R948	315-0914-00			RES.,FXD,CMPSN:910K OHM,5%,0.25W	01121	CB9145
R950	315-0681-00			RES.,FXD,CMPSN:680 OHM,5%,0.25W	01121	CB6815
R952	301-0303-00			RES.,FXD,CMPSN:30K OHM,5%,0.50W	01121	EB3035
R954	315-0472-00			RES.,FXD,CMPSN:4.7K OHM,5%,0.25W	01121	CB4725
R956	307-0103-00			RES.,FXD,CMPSN:2.7 OHM,5%,0.25W	01121	CB27G5
R957	315-0151-00			RES.,FXD,CMPSN:150 OHM,5%,0.25W	01121	CB1515
R958	308-0678-00			RES.,FXD,WW:0.1 OHM,5%,2W	75042	BWH-R1000J
R959	308-0680-00			RES.,FXD,WW:0.045 OHM,10%,3W	91637	LVR2-DR0450K
R961	315-0221-00			RES.,FXD,CMPSN:220 OHM,5%,0.25W	01121	CB2215
R963	315-0682-00			RES.,FXD,CMPSN:6.8K OHM,5%,0.25W	01121	CB6825
R966	315-0123-00			RES.,FXD,CMPSN:12K OHM,5%,0.25W	01121	CB1235
R967	315-0364-00			RES.,FXD,CMPSN:360K OHM,5%,0.25W	01121	CB3645
R970	321-0926-07			RES.,FXD,FILM:4K OHM,0.1%,0.125W	75042	CEAT9-4001B
R971	321-0924-07			RES.,FXD,FILM:40K OHM,0.1%,0.125W	75042	CEAT9-4002B
R973	315-0104-00	B010100	B029999	RES.,FXD,CMPSN:100K OHM,5%,0.25W	01121	CB1045
R973	315-0683-00	B030000		RES.,FXD,CMPSN:68K OHM,5%,0.25W	01121	CB6835
R974	315-0303-00	XB030000		RES.,FXD,CMPSN:30K OHM,5%,0.25W	01121	CB3035
R975	315-0362-00			RES.,FXD,CMPSN:3.6K OHM,5%,0.25W	01121	CB3625
R977	315-0184-00			RES.,FXD,CMPSN:180K OHM,5%,0.25W	01121	CB1845
R979	315-0822-00			RES.,FXD,CMPSN:8.2K OHM,5%,0.25W	01121	CB8225
R980	315-0164-00			RES.,FXD,CMPSN:160K OHM,5%,0.25W	01121	CB1645
R983	315-0472-00			RES.,FXD,CMPSN:4.7K OHM,5%,0.25W	01121	CB4725
R985	304-0470-00			RES.,FXD,CMPSN:47 OHM,10%,1W	01121	GB4701
R986	315-0122-00			RES.,FXD,CMPSN:1.2K OHM,5%,0.25W	01121	CB1225
R989	308-0678-00			RES.,FXD,WW:0.1 OHM,5%,2W	75042	BWH-R1000J
R991	315-0753-00			RES.,FXD,CMPSN:75K OHM,5%,0.25W	01121	CB7535
R993	315-0241-00			RES.,FXD,CMPSN:240 OHM,5%,0.25W	01121	CB2415
R994	315-0124-00			RES.,FXD,CMPSN:120K OHM,5%,0.25W	01121	CB1245
R995	315-0562-00			RES.,FXD,CMPSN:5.6K OHM,5%,0.25W	01121	CB5625
R1018	315-0102-00			RES.,FXD,CMPSN:1K OHM,5%,0.25W	01121	CB1025
R1019	315-0102-00			RES.,FXD,CMPSN:1K OHM,5%,0.25W	01121	CB1025
R1020	315-0150-00			RES.,FXD,CMPSN:15 OHM,5%,0.25W	01121	CB1505
R1022 [1]	315-0303-00			RES.,FXD,CMPSN:30K OHM,5%,0.25W	01121	CB3035
R1045 [1]	311-1414-00			RES.,VAR,NONWIR:50K OHM,20%,1W	01121	10M415A
R1061	315-0223-00			RES.,FXD,CMPSN:22K OHM,5%,0.25W	01121	CB2235
R1062	315-0362-00			RES.,FXD,CMPSN:3.6K OHM,5%,0.25W	01121	CB3625
R1063	315-0433-00			RES.,FXD,CMPSN:43K OHM,5%,0.25W	01121	CB4335
R1066	315-0183-00			RES.,FXD,CMPSN:18K OHM,5%,0.25W	01121	CB1835
R1067	315-0513-00			RES.,FXD,CMPSN:51K OHM,5%,0.25W	01121	CB5135
R1069	315-0433-00			RES.,FXD,CMPSN:43K OHM,5%,0.25W	01121	CB4335
R1071	323-0260-00			RES.,FXD,FILM:4.99K OHM,1%,0.50W	75042	CECT0-4991F
R1073	315-0222-00			RES.,FXD,CMPSN:2.2K OHM,5%,0.25W	01121	CB2225
R1074	315-0102-00			RES.,FXD,CMPSN:1K OHM,5%,0.25W	01121	CB1025
R1076	315-0752-00			RES.,FXD,CMPSN:7.5K OHM,5%,0.25W	01121	CB7525
R1077	311-1227-00			RES.,VAR,NONWIR:5K OHM,20%,0.50W	80294	3389F-P31-502
R1079	315-0203-00			RES.,FXD,CMPSN:20K OHM,5%,0.25W	01121	CB2035
R1081	321-0812-07			RES.,FXD,FILM:455 OHM,0.1%,0.125W	75042	CEAT9-4550B
R1082	321-0825-03			RES.,FXD,FILM:50.8 OHM,0.25%,0.125W	75042	CEAT2-50R80C
R1084	321-0816-07			RES.,FXD,FILM:5K OHM,0.1%,0.125W	75042	CEAT9-5001B
R1085	321-1068-07			RES.,FXD,FILM:50.5 OHM,0.1%,0.125W	75042	CEAT9-50R50B
R1087	308-0679-00			RES.,FXD,WW:0.51 OHM,5%,2W	75042	BWH-R5100J
R1095	311-0310-00	B010100	B169999X	RES.,VAR,NONWIR:5K OHM,20%,0.50W	01121	W-7350A

[1]Furnished as a unit with S1030.

http://manoman.sqhill.com

Ckt No.	Tektronix Part No.	Serial/Model No. Eff	Dscont	Name & Description	Mfr Code	Mfr Part Number
R1101	315-0470-00			RES.,FXD,CMPSN:47 OHM,5%,0.25W	01121	CB4705
R1103	315-0471-00			RES.,FXD,CMPSN:470 OHM,5%,0.25W	01121	CB4715
R1104	315-0473-00			RES.,FXD,CMPSN:47K OHM,5%,0.25W	01121	CB4735
R1105	315-0472-00			RES.,FXD,CMPSN:4.7K OHM,5%,0.25W	01121	CB4725
R1108	315-0471-00			RES.,FXD,CMPSN:470 OHM,5%,0.25W	01121	CB4715
R1131	315-0473-00			RES.,FXD,CMPSN:47K OHM,5%,0.25W	01121	CB4735
R1132	315-0224-00			RES.,FXD,CMPSN:220K OHM,5%,0.25W	01121	CB2245
R1135	301-0184-00			RES.,FXD,CMPSN:180K OHM,5%,0.50W	01121	EB1845
R1137	315-0564-00			RES.,FXD,CMPSN:560K OHM,5%,0.25W	01121	CB5645
R1138	301-0184-00			RES.,FXD,CMPSN:180K OHM,5%,0.50W	01121	EB1845
R1140	315-0124-00			RES.,FXD,CMPSN:120K OHM,5%,0.25W	01121	CB1245
R1141	315-0912-00			RES.,FXD,CMPSN:9.1K OHM,5%,0.25W	01121	CB9125
R1144	315-0562-00			RES.,FXD,CMPSN:5.6K OHM,5%,0.25W	01121	CB5625
R1146	303-0203-00			RES.,FXD,CMPSN:20K OHM,5%,1W	01121	GB2035
R1148	315-0102-00			RES.,FXD,CMPSN:1K OHM,5%,0.25W	01121	CB1025
R1149	315-0102-00			RES.,FXD,CMPSN:1K OHM,5%,0.25W	01121	CB1025
R1151	315-0100-00			RES.,FXD,CMPSN:10 OHM,5%,0.25W	01121	CB1005
R1152	315-0472-00			RES.,FXD,CMPSN:4.7K OHM,5%,0.25W	01121	CB4725
R1154	315-0101-00			RES.,FXD,CMPSN:100 OHM,5%,0.25W	01121	CB1015
R1155	315-0103-00			RES.,FXD,CMPSN:10K OHM,5%,0.25W	01121	CB1035
R1157	315-0121-00			RES.,FXD,CMPSN:120 OHM,5%,0.25W	01121	CB1215
R1158	315-0682-00	B010100	B19999	RES.,FXD,CMPSN:6.8K OHM,5%,0.25W	01121	CB6825
R1158	315-0752-00	B200000		RES.,FXD,CMPSN:7.5K OHM,5%,0.25W	01121	CB7525
R1159	323-0312-00			RES.,FXD,FILM:17.4K OHM,1%,0.50W	75042	CECT0-1742F
R1181	311-1227-00			RES.,VAR,NONWIR:5K OHM,20%,0.50W	80294	3389F-P31-502
R1184	311-1252-00			RES.,VAR,NONWIR:500K OHM,20%,0.50W	80294	3389F-P31-504
R1188	315-0163-00			RES.,FXD,CMPSN:16K OHM,5%,0.25W	01121	CB1635
R1193	311-1252-00			RES.,VAR,NONWIR:500K OHM,20%,0.50W	80294	3389F-P31-504
R1195	315-0273-00			RES.,FXD,CMPSN:27K OHM,5%,0.25W	01121	CB2735
R1202	315-0102-00			RES.,FXD,CMPSN:1K OHM,5%,0.25W	01121	CB1025
R1204	315-0395-00			RES.,FXD,CMPSN:3.9M OHM,5%,0.25W	01121	CB3955
R1207	315-0102-00			RES.,FXD,CMPSN:1K OHM,5%,0.25W	01121	CB1025
R1208	315-0104-00			RES.,FXD,CMPSN:100K OHM,5%,0.25W	01121	CB1045
R1212	315-0243-00	XB070000		RES.,FXD,CMPSN:24K OHM,5%,0.25W	01121	CB2435
R1214	315-0562-00	B010100	B139999	RES.,FXD,CMPSN:5.6K OHM,5%,0.25W	01121	CB5625
R1214	315-0273-00	B140000		RES.,FXD,CMPSN:27K OHM,5%,0.25W	01121	CB2735
R1223	315-0753-00	XB050000		RES.,FXD,CMPSN:75K OHM,5%,0.25W	01121	CB7535
R1224	315-0204-00	B010100	B119999	RES.,FXD,CMPSN:200K OHM,5%,0.25W	01121	CB2045
R1224	315-0202-00	B120000		RES.,FXD,CMPSN:2K OHM,5%,0.25W	01121	CB2025
R1225	315-0103-00			RES.,FXD,CMPSN:10K OHM,5%,0.25W	01121	CB1035
R1226	315-0205-00	B010100	B049999	RES.,FXD,CMPSN:2M OHM,5%,0.25W	01121	CB2055
R1226	315-0224-00	B050000		RES.,FXD,CMPSN:220K OHM,5%,0.25W	01121	CB2245
R1228	323-0423-00			RES.,FXD,FILM:249K OHM,1%,0.50W	75042	CECT0-2493F
R1229	321-0353-00			RES.,FXD,FILM:46.4K OHM,1%,0.125W	75042	CEAT0-4642F
R1232	315-0100-00			RES.,FXD,CMPSN:10 OHM,5%,0.25W	01121	CB1005
R1234	315-0473-00			RES.,FXD,CMPSN:47K OHM,5%,0.25W	01121	CB4735
R1236	315-0103-00			RES.,FXD,CMPSN:10K OHM,5%,0.25W	01121	CB1035
R1237	321-0385-00			RES.,FXD,FILM:100K OHM,1%,0.125W	75042	CEAT0-1003F
R1238	321-0358-00			RES.,FXD,FILM:52.3K OHM,1%,0.125W	75042	CEAT0-5232F
R1241	315-0101-00			RES.,FXD,CMPSN:100 OHM,5%,0.25W	01121	CB1015
R1242	315-0332-00			RES.,FXD,CMPSN:3.3K OHM,5%,0.25W	01121	CB3325
R1243	315-0304-00			RES.,FXD,CMPSN:300K OHM,5%,0.25W	01121	CB3045
R1245A	307-0396-00			RES.,FXD,FILM:496K OHM	80009	307-0396-00
R1245B	307-0396-00			RES.,FXD,FILM:30.17M OHM	80009	307-0396-00

http://manoman.sqhill.com

Ckt No.	Tektronix Part No.	Serial/Model No. Eff	Dscont	Name & Description	Mfr Code	Mfr Part Number
R1245C	307-0396-00			RES.,FXD,FILM:23.4M OHM	80009	307-0396-00
R1245D	307-0396-00			RES.,FXD,FILM:3.905M OHM	80009	307-0396-00
R1250	311-1399-00			RES.,VAR,NONWIR:5M OHM,20%,0.50W	73138	72Y-90-0-505K
R1251	316-0126-00			RES.,FXD,CMPSN:12M OHM,10%,0.25W	01121	CB1261
R1252	315-0915-00			RES.,FXD,CMPSN:9.1M OHM,5%,0.25W	01121	CB9155
R1253	315-0393-00			RES.,FXD,CMPSN:39K OHM,5%,0.25W	01121	CB3935
R1254	315-0393-00			RES.,FXD,CMPSN:39K OHM,5%,0.25W	01121	CB3935
R1255	315-0103-00			RES.,FXD,CMPSN:10K OHM,5%,0.25W	01121	CB1035
R1257	301-0474-00	B010100	B029999	RES.,FXD,CMPSN:470K OHM,5%,0.50W	01121	EB4745
R1257	301-0334-00	B030000		RES.,FXD,CMPSN:330K OHM,5%,0.50W	01121	EB3345
R1258	315-0121-00			RES.,FXD,CMPSN:120 OHM,5%,0.25W	01121	CB1215
R1261	311-1232-00			RES.,VAR,NONWIR:50K OHM,20%,0.50W	80294	3389F-P31-503
R1263	315-0513-00			RES.,FXD,CMPSN:51K OHM,5%,0.25W	01121	CB5135
R1266	301-0165-00	B010100	B029999	RES.,FXD,CMPSN:1.6M OHM,5%,0.50W	01121	EB1655
R1266	301-0824-00	B030000		RES.,FXD,CMPSN:820K OHM,5%,0.50W	01121	EB8245
R1269	315-0393-00			RES.,FXD,CMPSN:39K OHM,5%,0.25W	01121	CB3935
R1270	315-0393-00			RES.,FXD,CMPSN:39K OHM,5%,0.25W	01121	CB3935
R1271	315-0915-00			RES.,FXD,CMPSN:9.1M OHM,5%,0.25W	01121	CB9155
R1274	315-0104-00			RES.,FXD,CMPSN:100K OHM,5%,0.25W	01121	CB1045
R1275	315-0104-00			RES.,FXD,CMPSN:100K OHM,5%,0.25W	01121	CB1045
R1282	315-0203-00			RES.,FXD,CMPSN:20K OHM,5%,0.25W	01121	CB2035
R1286	315-0226-00			RES.,FXD,CMPSN:22M OHM,5%,0.25W	01121	CB2265
R1291	315-0100-00			RES.,FXD,CMPSN:10 OHM,5%,0.25W	01121	CB1005
R1300	315-0102-00			RES.,FXD,CMPSN:1K OHM,5%,0.25W	01121	CB1025
R1301	315-0102-00			RES.,FXD,CMPSN:1K OHM,5%,0.25W	01121	CB1025
R1307	315-0162-00			RES.,FXD,CMPSN:1.6K OHM,5%,0.25W	01121	CB1625
R1310	315-0163-00			RES.,FXD,CMPSN:16K OHM,5%,0.25W	01121	CB1635
R1311[1]	311-1415-00			RES.,VAR,NONWIR:500K OHM,20%,1W	01121	10M416A
R1313	315-0470-00			RES.,FXD,CMPSN:47 OHM,5%,0.25W	01121	CB4705
R1314	315-0181-00			RES.,FXD,CMPSN:180 OHM,5%,0.25W	01121	CB1815
R1316	315-0105-00			RES.,FXD,CMPSN:1M OHM,5%,0.25W	01121	CB1055
R1318	315-0152-00	B010100	B089999	RES.,FXD,CMPSN:1.5K OHM,5%,0.25W	01121	CB1525
R1318	315-0301-00	B090000		RES.,FXD,CMPSN:300 OHM,5%,0.25W	01121	CB3015
R1319	315-0332-00	B010100	B089999	RES.,FXD,CMPSN:3.3K OHM,5%,0.25W	01121	CB3325
R1319	315-0681-00	B090000		RES.,FXD,CMPSN:680 OHM,5%,0.25W	01121	CB6815
R1322	315-0181-00			RES.,FXD,CMPSN:180 OHM,5%,0.25W	01121	CB1815
R1323	315-0244-00			RES.,FXD,CMPSN:240K OHM,5%,0.25W	01121	CB2445
R1324	315-0470-00			RES.,FXD,CMPSN:47 OHM,5%,0.25W	01121	CB4705
R1326	315-0105-00			RES.,FXD,CMPSN:1M OHM,5%,0.25W	01121	CB1055
R1328	315-0152-00			RES.,FXD,CMPSN:1.5K OHM,5%,0.25W	01121	CB1525
R1329	315-0332-00			RES.,FXD,CMPSN:3.3K OHM,5%,0.25W	01121	CB3325
R1331	315-0332-00			RES.,FXD,CMPSN:3.3K OHM,5%,0.25W	01121	CB3325
R1341	315-0332-00			RES.,FXD,CMPSN:3.3K OHM,5%,0.25W	01121	CB3325
R1351	316-0473-00	B010100	B059999	RES.,FXD,CMPSN:47K OHM,10%,0.25W	01121	CB4731
R1351	315-0473-00	B060000		RES.,FXD,CMPSN:47K OHM,5%,0.25W	01121	CB4735
R1353	315-0184-00			RES.,FXD,CMPSN:180K OHM,5%,0.25W	01121	CB1845
R1354	315-0273-00			RES.,FXD,CMPSN:27K OHM,5%,0.25W	01121	CB2735
R1356	316-0103-00	B010100	B059999	RES.,FXD,CMPSN:10K OHM,10%,0.25W	01121	CB1031
R1356	315-0103-00	B060000		RES.,FXD,CMPSN:10K OHM,5%,0.25W	01121	CB1035
R1358	315-0122-00			RES.,FXD,CMPSN:1.2K OHM,5%,0.25W	01121	CB1225
R1359[2]	311-1190-00			RES.,VAR,NONWIR:10K OHM,20%,1W	01121	10M051A
R1361	315-0514-00			RES.,FXD,CMPSN:510K OHM,5%,0.25W	01121	CB5145
R1362	316-0102-00	B010100	B059999	RES.,FXD,CMPSN:1K OHM,10%,0.25W	01121	CB1021

[1]Furnished as a unit with S1311.
[2]Furnished as a unit with S1465.

http://manoman.sqhill.com

Ckt No.	Tektronix Part No.	Serial/Model No. Eff	Dscont	Name & Description	Mfr Code	Mfr Part Number
R1362	315-0102-00	B060000		RES.,FXD,CMPSN:1K OHM,5%,0.25W	01121	CB1025
R1364	316-0103-00	B010100	B059999	RES.,FXD,CMPSN:10K OHM,10%,0.25W	01121	CB1031
R1364	315-0103-00	B060000		RES.,FXD,CMPSN:10K OHM,5%,0.25W	01121	CB1035
R1365	316-0335-00	B010100	B059999	RES.,FXD,CMPSN:3.3M OHM,10%,0.25W	01121	CB3351
R1365	315-0335-00	B060000		RES.,FXD,CMPSN:3.3M OHM,5%,0.25W	01121	CB3355
R1366	316-0394-00	B010100	B059999	RES.,FXD,CMPSN:390K OHM,10%,0.25W	01121	CB3941
R1366	315-0394-00	B060000		RES.,FXD,CMPSN:390K OHM,5%,0.25W	01121	CB3945
R1368	316-0103-00	B010100	B059999	RES.,FXD,CMPSN:10K OHM,10%,0.25W	01121	CB1031
R1368	315-0103-00	B060000		RES.,FXD,CMPSN:10K OHM,5%,0.25W	01121	CB1035
R1370	315-0184-00			RES.,FXD,CMPSN:180K OHM,5%,0.25W	01121	CB1845
R1371	315-0563-00			RES.,FXD,CMPSN:56K OHM,5%,0.25W	01121	CB5635
R1373	316-0104-00	B010100	B059999	RES.,FXD,CMPSN:100K OHM,10%,0.25W	01121	CB1041
R1373	315-0104-00	B060000		RES.,FXD,CMPSN:100K OHM,5%,0.25W	01121	CB1045
R1375	316-0333-00	B010100	B059999	RES.,FXD,CMPSN:33K OHM,10%,0.25W	01121	CB3331
R1375	315-0333-00	B060000		RES.,FXD,CMPSN:33K OHM,5%,0.25W	01121	CB3335
R1378	301-0163-00			RES.,FXD,CMPSN:16K OHM,5%,0.50W	01121	EB1635
R1379	316-0221-00	B010100	B059999	RES.,FXD,CMPSN:220 OHM,10%,0.25W	01121	CB2211
R1379	315-0221-00	B060000		RES.,FXD,CMPSN:220 OHM,5%,0.25W	01121	CB2215
R1381	321-0337-00			RES.,FXD,FILM:31.6K OHM,1%,0.125W	75042	CEAT0-3162F
R1382	321-0286-00			RES.,FXD,FILM:9.31K OHM,1%,0.125W	75042	CEAT0-9311F
R1384	321-0330-00			RES.,FXD,FILM:26.7K OHM,1%,0.125W	75042	CEAT0-2672F
R1386	311-1227-00			RES.,VAR,NONWIR:5K OHM,20%,0.50W	80294	3389F-P31-502
R1387	311-1229-00			RES.,VAR,NONWIR:15K OHM,20%,0.50W	80294	3389F-P31-153
R1388	321-0270-00			RES.,FXD,FILM:6.34K OHM,1%,0.125W	75042	CEAT0-6341F
R1391	315-0753-00			RES.,FXD,CMPSN:75K OHM,5%,0.25W	01121	CB7535
R1392	321-0334-00			RES.,FXD,FILM:29.4K OHM,1%,0.125W	75042	CEAT0-2942F
R1394	304-0124-00			RES.,FXD,CMPSN:120K OHM,10%,1W	01121	GB1241
R1401	316-0222-00	B010100	B059999	RES.,FXD,CMPSN:2.2K OHM,10%,0.25W	01121	CB2221
R1401	315-0222-00	B060000		RES.,FXD,CMPSN:2.2K OHM,5%,0.25W	01121	CB2225
R1402	316-0823-00	B010100	B059999	RES.,FXD,CMPSN:82K OHM,10%,0.25W	01121	CB8231
R1402	315-0823-00	B060000		RES.,FXD,CMPSN:82K OHM,5%,0.25W	01121	CB8235
R1404	316-0103-00	B010100	B059999	RES.,FXD,CMPSN:10K OHM,10%,0.25W	01121	CB1031
R1404	315-0103-00	B060000		RES.,FXD,CMPSN:10K OHM,5%,0.25W	01121	CB1035
R1407	323-0410-00			RES.,FXD,FILM:182K OHM,1%,0.50W	75042	CECT0-1823F
R1408	315-0102-00	XB090000		RES.,FXD,CMPSN:1K OHM,5%,0.25W	01121	CB1025
R1409	321-0334-00			RES.,FXD,FILM:29.4K OHM,1%,0.125W	75042	CEAT0-2942F
R1411	315-0514-00			RES.,FXD,CMPSN:510K OHM,5%,0.25W	01121	CB5145
R1412	316-0102-00	B010100	B059999	RES.,FXD,CMPSN:1K OHM,10%,0.25W	01121	CB1021
R1412	315-0102-00	B060000		RES.,FXD,CMPSN:1K OHM,5%,0.25W	01121	CB1025
R1414	316-0103-00	B010100	B059999	RES.,FXD,CMPSN:10K OHM,10%,0.25W	01121	CB1031
R1414	315-0103-00	B060000		RES.,FXD,CMPSN:10K OHM,5%,0.25W	01121	CB1035
R1415	316-0335-00	B010100	B059999	RES.,FXD,CMPSN:3.3M OHM,10%,0.25W	01121	CB3351
R1415	315-0335-00	B060000		RES.,FXD,CMPSN:3.3M OHM,5%,0.25W	01121	CB3355
R1416	316-0394-00	B010100	B059999	RES.,FXD,CMPSN:390K OHM,10%,0.25W	01121	CB3941
R1416	315-0394-00	B060000		RES.,FXD,CMPSN:390K OHM,5%,0.25W	01121	CB3945
R1418	316-0103-00	B010100	B059999	RES.,FXD,CMPSN:10K OHM,10%,0.25W	01121	CB1031
R1418	315-0103-00	B060000		RES.,FXD,CMPSN:10K OHM,5%,0.25W	01121	CB1035
R1420	315-0184-00			RES.,FXD,CMPSN:180K OHM,5%,0.25W	01121	CB1845
R1421	315-0563-00			RES.,FXD,CMPSN:56K OHM,5%,0.25W	01121	CB5635
R1423	316-0104-00	B010100	B059999	RES.,FXD,CMPSN:100K OHM,10%,0.25W	01121	CB1041
R1423	315-0104-00	B060000		RES.,FXD,CMPSN:100K OHM,5%,0.25W	01121	CB1045
R1425	316-0333-00	B010100	B059999	RES.,FXD,CMPSN:33K OHM,10%,0.25W	01121	CB3331
R1425	315-0333-00	B060000		RES.,FXD,CMPSN:33K OHM,5%,0.25W	01121	CB3335

http://manoman.sqhill.com

Ckt No.	Tektronix Part No.	Serial/Model No. Eff	Dscont	Name & Description	Mfr Code	Mfr Part Number
R1428	301-0163-00			RES.,FXD,CMPSN:16K OHM,5%,0.50W	01121	EB1635
R1429	316-0221-00	B010100	B059999	RES.,FXD,CMPSN:220 OHM,10%,0.25W	01121	CB2211
R1429	315-0221-00	B060000		RES.,FXD,CMPSN:220 OHM,5%,0.25W	01121	CB2215
R1431	321-0337-00			RES.,FXD,FILM:31.6K OHM,1%,0.125W	75042	CEAT0-3162F
R1432	321-0286-00			RES.,FXD,FILM:9.31K OHM,1%,0.125W	75042	CEAT0-9311F
R1434	321-0330-00			RES.,FXD,FILM:26.7K OHM,1%,0.125W	75042	CEAT0-2672F
R1436	311-1227-00			RES.,VAR,NONWIR:5K OHM,20%,0.50W	80294	3389F-P31-502
R1437	311-1229-00			RES.,VAR,NONWIR:15K OHM,20%,0.50W	80294	3389F-P31-153
R1438	321-0270-00			RES.,FXD,FILM:6.34K OHM,1%,0.125W	75042	CEAT0-6341F
R1441	315-0753-00			RES.,FXD,CMPSN:75K OHM,5%,0.25W	01121	CB7535
R1442	321-0334-00			RES.,FXD,FILM:29.4K OHM,1%,0.125W	75042	CEAT0-2942F
R1444	304-0124-00			RES.,FXD,CMPSN:120K OHM,10%,1W	01121	GB1241
R1451	316-0222-00	B010100	B059999	RES.,FXD,CMPSN:2.2K OHM,10%,0.25W	01121	CB2221
R1451	315-0222-00	B060000		RES.,FXD,CMPSN:2.2K OHM,5%,0.25W	01121	CB2225
R1452	316-0823-00	B010100	B059999	RES.,FXD,CMPSN:82K OHM,10%,0.25W	01121	CB8231
R1452	315-0823-00	B060000		RES.,FXD,CMPSN:82K OHM,5%,0.25W	01121	CB8235
R1454	316-0103-00	B010100	B059999	RES.,FXD,CMPSN:10K OHM,10%,0.25W	01121	CB1031
R1454	315-0103-00	B060000		RES.,FXD,CMPSN:10K OHM,5%,0.25W	01121	CB1035
R1457	323-0410-00			RES.,FXD,FILM:182K OHM,1%,0.50W	75042	CECT0-1823F
R1459	321-0334-00			RES.,FXD,FILM:29.4K OHM,1%,0.125W	75042	CEAT0-2942F
R1461	315-0104-00			RES.,FXD,CMPSN:100K OHM,5%,0.25W	01121	CB1045
R1463	315-0203-00			RES.,FXD,CMPSN:20K OHM,5%,0.25W	01121	CB2035
R1464	315-0205-00			RES.,FXD,CMPSN:2M OHM,5%,0.25W	01121	CB2055
R1468	308-0503-00			RES.,FXD,WW:6.8 OHM,5%,2.50W	91637	RS2B-D6R800J
R1472	311-1235-00			RES.,VAR,NONWIR:100K OHM,20%,0.50W	80294	3389F-P31-104
R1475	315-0433-00			RES.,FXD,CMPSN:43K OHM,5%,0.25W	01121	CB4335
R1483	301-0224-00			RES.,FXD,CMPSN:220K OHM,5%,0.50W	01121	EB2245
R1485	311-1214-00			RES.,VAR,NONWIR:200K OHM,20%,0.50W	80294	3389F-P31-204
R2101	315-0682-00			RES.,FXD,CMPSN:6.8K OHM,5%,0.25W	01121	CB6825
R2102	315-0103-00			RES.,FXD,CMPSN:10K OHM,5%,0.25W	01121	CB1035
R2104	315-0333-00			RES.,FXD,CMPSN:33K OHM,5%,0.25W	01121	CB3335
R2105	315-0153-00			RES.,FXD,CMPSN:15K OHM,5%,0.25W	01121	CB1535
R2107	315-0510-00			RES.,FXD,CMPSN:51 OHM,5%,0.25W	01121	CB5105
R2108	315-0512-00			RES.,FXD,CMPSN:5.1K OHM,5%,0.25W	01121	CB5125
R2109	315-0221-00			RES.,FXD,CMPSN:220 OHM,5%,0.25W	01121	CB2215
R2112	315-0102-00			RES.,FXD,CMPSN:1K OHM,5%,0.25W	01121	CB1025
R2113	315-0301-00			RES.,FXD,CMPSN:300 OHM,5%,0.25W	01121	CB3015
R2122	315-0432-00			RES.,FXD,CMPSN:4.3K OHM,5%,0.25W	01121	CB4325
R2123	315-0683-00			RES.,FXD,CMPSN:68K OHM,5%,0.25W	01121	CB6835
R2127	315-0302-00			RES.,FXD,CMPSN:3K OHM,5%,0.25W	01121	CB3025
R2128	311-1225-00	B010100	B109999	RES.,VAR,NONWIR:1K OHM,20%,0.50W	80294	3389F-P31-102
R2128	311-1263-00	B110000		RES.,VAR,NONWIR:1K OHM,10%,0.50W	73138	62PT-347-0
R2129	315-0183-00			RES.,FXD,CMPSN:18K OHM,5%,0.25W	01121	CB1835
R2135	315-0393-00			RES.,FXD,CMPSN:39K OHM,5%,0.25W	01121	CB3935
R2137	315-0752-00			RES.,FXD,CMPSN:7.5K OHM,5%,0.25W	01121	CB7525
R2139	315-0242-00			RES.,FXD,CMPSN:2.4K OHM,5%,0.25W	01121	CB2425
R2144	315-0104-00			RES.,FXD,CMPSN:100K OHM,5%,0.25W	01121	CB1045
R2146	315-0152-00			RES.,FXD,CMPSN:1.5K OHM,5%,0.25W	01121	CB1525
R2148	315-0103-00			RES.,FXD,CMPSN:10K OHM,5%,0.25W	01121	CB1035
R2150	321-0403-00			RES.,FXD,FILM:154K OHM,1%,0.125W	75042	CEAT0-1543F
R2151	321-0372-00			RES.,FXD,FILM:73.2K OHM,1%,0.125W	75042	CEAT0-7322F
R2153	315-0103-00			RES.,FXD,CMPSN:10K OHM,5%,0.25W	01121	CB1035
R2155	315-0512-00			RES.,FXD,CMPSN:5.1K OHM,5%,0.25W	01121	CB5125

http://manoman.sqhill.com

Ckt No.	Tektronix Part No.	Serial/Model No. Eff	Dscont	Name & Description	Mfr Code	Mfr Part Number
R2158	315-0152-00			RES.,FXD,CMPSN:1.5K OHM,5%,0.25W	01121	CB1525
R2161	315-0102-00			RES.,FXD,CMPSN:1K OHM,5%,0.25W	01121	CB1025
R2162	315-0751-00			RES.,FXD,CMPSN:750 OHM,5%,0.25W	01121	CB7515
R2163	315-0751-00			RES.,FXD,CMPSN:750 OHM,5%,0.25W	01121	CB7515
R2165	315-0102-00			RES.,FXD,CMPSN:1K OHM,5%,0.25W	01121	CB1025
R2166	315-0751-00			RES.,FXD,CMPSN:750 OHM,5%,0.25W	01121	CB7515
R2167	315-0751-00			RES.,FXD,CMPSN:750 OHM,5%,0.25W	01121	CB7515
R2169	315-0102-00			RES.,FXD,CMPSN:1K OHM,5%,0.25W	01121	CB1025
R2170	315-0751-00			RES.,FXD,CMPSN:750 OHM,5%,0.25W	01121	CB7515
R2171	315-0751-00			RES.,FXD,CMPSN:750 OHM,5%,0.25W	01121	CB7515
R2173	315-0102-00			RES.,FXD,CMPSN:1K OHM,5%,0.25W	01121	CB1025
R2174	315-0751-00			RES.,FXD,CMPSN:750 OHM,5%,0.25W	01121	CB7515
R2175	315-0751-00			RES.,FXD,CMPSN:750 OHM,5%,0.25W	01121	CB7515
R2177	315-0511-00			RES.,FXD,CMPSN:510 OHM,5%,0.25W	01121	CB5115
R2178	315-0511-00			RES.,FXD,CMPSN:510 OHM,5%,0.25W	01121	CB5115
R2179	315-0511-00			RES.,FXD,CMPSN:510 OHM,5%,0.25W	01121	CB5115
R2182	321-0262-00			RES.,FXD,FILM:5.23K OHM,1%,0.125W	75042	CEAT0-5231F
R2183	311-1224-00			RES.,VAR,NONWIR:500 OHM,20%,0.50W	80294	3389F-P31-501
R2191	315-0513-00			RES.,FXD,CMPSN:51K OHM,5%,0.25W	01121	CB5135
R2192	315-0133-00			RES.,FXD,CMPSN:13K OHM,5%,0.25W	01121	CB1335
R2193	315-0133-00			RES.,FXD,CMPSN:13K OHM,5%,0.25W	01121	CB1335
R2194	315-0753-00			RES.,FXD,CMPSN:75K OHM,5%,0.25W	01121	CB7535
R2196	321-0308-00			RES.,FXD,FILM:15.8K OHM,1%,0.125W	75042	CEAT0-1582F
R2197	315-0513-00			RES.,FXD,CMPSN:51K OHM,5%,0.25W	01121	CB5135
R2198	321-0319-00			RES.,FXD,FILM:20.5K OHM,1%,0.125W	75042	CEAT0-2052F
R2199	321-0335-00			RES.,FXD,FILM:30.1K OHM,1%,0.125W	75042	CEAT0-3012F
R2201	315-0154-00			RES.,FXD,CMPSN:150K OHM,5%,0.25W	01121	CB1545
R2202	321-0335-00			RES.,FXD,FILM:30.1K OHM,1%,0.125W	75042	CEAT0-3012F
R2203	321-0344-00			RES.,FXD,FILM:37.4K OHM,1%,0.125W	75042	CEAT0-3742F
R2204	321-0335-00			RES.,FXD,FILM:30.1K OHM,1%,0.125W	75042	CEAT0-3012F
R2206	315-0513-00			RES.,FXD,CMPSN:51K OHM,5%,0.25W	01121	CB5135
R2207	315-0154-00			RES.,FXD,CMPSN:150K OHM,5%,0.25W	01121	CB1545
R2208	321-0335-00			RES.,FXD,FILM:30.1K OHM,1%,0.125W	75042	CEAT0-3012F
R2209	321-0335-00			RES.,FXD,FILM:30.1K OHM,1%,0.125W	75042	CEAT0-3012F
R2211	315-0752-00			RES.,FXD,CMPSN:7.5K OHM,5%,0.25W	01121	CB7525
R2213	321-0259-00			RES.,FXD,FILM:4.87K OHM,1%,0.125W	12697	MFF1816G48700F
R2214	311-1224-00			RES.,VAR,NONWIR:500 OHM,20%,0.50W	80294	3389F-P31-501
R2215	315-0133-00			RES.,FXD,CMPSN:13K OHM,5%,0.25W	01121	CB1335
R2217	315-0124-00			RES.,FXD,CMPSN:120K OHM,5%,0.25W	01121	CB1245
R2219	315-0751-00			RES.,FXD,CMPSN:750 OHM,5%,0.25W	01121	CB7515
R2220	321-0299-00			RES.,FXD,FILM:12.7K OHM,1%,0.125W	75042	CEAT0-1272F
R2221	321-0212-00			RES.,FXD,FILM:1.58K OHM,1%,0.125W	75042	CEAT0-1581F
R2226	315-0222-00			RES.,FXD,CMPSN:2.2K OHM,5%,0.25W	01121	CB2225
R2227	321-0268-00			RES.,FXD,FILM:6.04K OHM,1%,0.125W	75042	CEAT0-6041F
R2229	321-0210-00			RES.,FXD,FILM:1.5K OHM,1%,0.125W	75042	CEAT0-1501F
R2231	315-0303-00			RES.,FXD,CMPSN:30K OHM,5%,0.25W	01121	CB3035
R2235	315-0203-00			RES.,FXD,CMPSN:20K OHM,5%,0.25W	01121	CB2035
R2236	315-0203-00			RES.,FXD,CMPSN:20K OHM,5%,0.25W	01121	CB2035
R2237	315-0203-00			RES.,FXD,CMPSN:20K OHM,5%,0.25W	01121	CB2035
R2238	315-0203-00			RES.,FXD,CMPSN:20K OHM,5%,0.25W	01121	CB2035
R2241	321-0326-00			RES.,FXD,FILM:24.3K OHM,1%,0.125W	75042	CEAT0-2432F
R2251	315-0102-00			RES.,FXD,CMPSN:1K OHM,5%,0.25W	01121	CB1025
R2252	315-0102-00			RES.,FXD,CMPSN:1K OHM,5%,0.25W	01121	CB1025

http://manoman.sqhill.com

Ckt No.	Tektronix Part No.	Serial/Model No. Eff	Dscont	Name & Description	Mfr Code	Mfr Part Number
R2253	315-0102-00			RES.,FXD,CMPSN:1K OHM,5%,0.25W	01121	CB1025
R2254	315-0303-00	XB110000		RES.,FXD,CMPSN:30K OHM,5%,0.25W	01121	CB3035
R2261	315-0272-00			RES.,FXD,CMPSN:2.7K OHM,5%,0.25W	01121	CB2725
R2262	315-0102-00			RES.,FXD,CMPSN:1K OHM,5%,0.25W	01121	CB1025
R2265	315-0512-00			RES.,FXD,CMPSN:5.1K OHM,5%,0.25W	01121	CB5125
R2266	315-0912-00			RES.,FXD,CMPSN:9.1K OHM,5%,0.25W	01121	CB9125
R2268	321-0296-00			RES.,FXD,FILM:11.8K OHM,1%,0.125W	75042	CEAT0-1182F
R2273	311-1226-00			RES.,VAR,NONWIR:2.5K OHM,20%,0.50W	80294	3389F-P31-252
R2274	321-0153-00			RES.,FXD,FILM:383 OHM,1%,0.125W	75042	CEAT0-3830F
R2275	321-0170-00			RES.,FXD,FILM:576 OHM,1%,0.125W	75042	CEAT0-5760F
R2276	315-0223-00			RES.,FXD,CMPSN:22K OHM,5%,0.25W	01121	CB2235
R2277	321-0250-00			RES.,FXD,FILM:3.92K OHM,1%,0.125W	75042	CEAT0-3921F
R2278	315-0823-00	XB110000		RES.,FXD,CMPSN:82K OHM,5%,0.25W	01121	CB8235
R2279	321-0222-00			RES.,FXD,FILM:2K OHM,1%,0.125W	75042	CEAT0-2001F
R2280	315-0823-00			RES.,FXD,CMPSN:82K OHM,5%,0.25W	01121	CB8235
R2281	315-0101-00	XB110000		RES.,FXD,CMPSN:100 OHM,5%,0.25W	01121	CB1015
R2282	315-0332-00			RES.,FXD,CMPSN:3.3K OHM,5%,0.25W	01121	CB3325
R2283	315-0753-00	XB110000		RES.,FXD,CMPSN:75K OHM,5%,0.25W	01121	CB7535
R2284	321-0216-00			RES.,FXD,FILM:1.74K OHM,1%,0.125W	75042	CEAT0-1741F
R2285	321-0245-00			RES.,FXD,FILM:3.48K OHM,1%,0.125W	75042	CEAT0-3481F
R2286	321-0209-00			RES.,FXD,FILM:1.47K OHM,1%,0.125W	75042	CEAT0-1471F
R2287	321-0199-00			RES.,FXD,FILM:1.15K OHM,1%,0.125W	75042	CEAT0-1151F
R2288	321-0273-00			RES.,FXD,FILM:6.81K OHM,1%,0.125W	75042	CEAT0-6811F
R2289	321-0193-00			RES.,FXD,FILM:1K OHM,1%,0.125W	75042	CEAT0-1001F
R2291	311-1225-00			RES.,VAR,NONWIR:1K OHM,20%,0.50W	80294	3389F-P31-102
R2292	315-0132-00			RES.,FXD,CMPSN:1.3K OHM,5%,0.25W	01121	CB1325
R2293	321-0245-00			RES.,FXD,FILM:3.48K OHM,1%,0.125W	75042	CEAT0-3481F
R2294	321-0255-00			RES.,FXD,FILM:4.42K OHM,1%,0.125W	75042	CEAT0-4421F
R2295	321-0241-00			RES.,FXD,FILM:3.16K OHM,1%,0.125W	75042	CEAT0-3161F
R2297	315-0102-00	B010100	B029999	RES.,FXD,CMPSN:1K OHM,5%,0.25W	01121	CB1025
R2297	315-0152-00	B030000		RES.,FXD,CMPSN:1.5K OHM,5%,0.25W	01121	CB1525
R2298	315-0102-00			RES.,FXD,CMPSN:1K OHM,5%,0.25W	01121	CB1025
R2299	315-0511-00	B010100	B109999	RES.,FXD,CMPSN:510 OHM,5%,0.25W	01121	CB5115
R2299	315-0431-00	B110000		RES.,FXD,CMPSN:430 OHM,5%,0.25W	01121	CB4315
S102[1]						
S659	260-0984-00			SWITCH,SLIDE:DP3POSN,0.5A,125VAC-DC	79727	G-128SPC/7140
S1000	260-0724-00	B010100	B131244	SW,THERMOSTATIC:OPEN 83.3 DEG,CL 66.7 DEG C	93410	110181
S1000	260-1759-00	B131245		SW,THERMTC:NC,83.3 OPEN,66.7 CLOSE 10A,240V		
S1001	260-1368-01	B010100	B159999	SWITCH,PUSH:SPST,15A,250VAC	04426	23-1542
S1001	260-1709-00	B160000		SWITCH PUSH:POWER	77342	A9T5 762-6-3
S1011	260-1379-00			SWITCH,PUSH:TRIG SOURCE	71590	2KBC120000-595
S1021	260-1378-00			SWITCH,PUSH:VERT MODE	71590	2KBC140000-608
S1030[2]						
S1311[3]						
S1330	260-1443-00			SWITCH,PUSH:	71590	2KCM040000
S1340	260-1444-00			SWITCH,PUSH:	71590	2KCM040000
S1465[4]						
S2110	260-0723-00			SWITCH,SLIDE:DPDT,0.5A,125VAC	79727	GF126-0028
T801	120-0708-00			XFMR,PWR,STPDN:LV	80009	120-0708-00
T1225	120-0811-00			XFMR,PWR,SDN &:HV	80009	120-0811-00
U55	155-0011-00			MICROCIRCUIT,DI:ML,CLOCK AND CHOP BLANKING	80009	155-0011-00
U99	156-0048-00			MICROCIRCUIT,LI:FIVE NPN TRANSISTOR	86684	CA3046

[1]Furnished as a unit with R102A,B.
[2]Furnished as a unit with R1045.
[3]Furnished as a unit with R1311.
[4]Furnished as a unit with R1359.

http://manoman.sqhill.com

Ckt No.	Tektronix Part No.	Serial/Model No. Eff	Dscont	Name & Description	Mfr Code	Mfr Part Number
U123	156-0041-00			MICROCIRCUIT,DI:DUAL D-TYPE FLIP-FLOP	27014	DM7474N
U156	156-0041-00			MICROCIRCUIT,DI:DUAL D-TYPE FLIP-FLOP	27014	DM7474N
U214	155-0022-00			MICROCIRCUIT,DI:ML CHANNEL SWITCH	80009	155-0022-00
U324	155-0022-00			MICROCIRCUIT,DI:ML CHANNEL SWITCH	80009	155-0022-00
U510	155-0022-00			MICROCIRCUIT,DI:ML CHANNEL SWITCH	80009	155-0022-00
U973	156-0065-00			MICROCIRCUIT,LI:FIVE NPN TRANSISTOR ARRAY	80009	156-0065-00
U1304	156-0039-00			MICROCIRCUIT,DI:DUAL J-K FLIP FLOP	01295	SN7473N
U1320	156-0043-00			MICROCIRCUIT,DI:2-INPUT NOR GATE	01295	SN7402N
U2120	156-0043-00			MICROCIRCUIT,DI:2-INPUT NOR GATE	01295	SN7402N
U2126	155-0021-00	B010100	B081024	MICROCIRCUIT,DI:ML,TIMING GENERATOR	80009	155-0021-00
U2126	155-0021-01	B081025		MICROCIRCUIT,DI:ML,TIMING GENERATOR	80009	155-0021-01
U2155	156-0043-00			MICROCIRCUIT,DI:2-INPUT NOR GATE	01295	SN7402N
U2159	155-0017-00			MICROCIRCUIT,DI:ML,ZERO LOGICOUNTER	80009	155-0017-00
U2180	155-0015-01			MICROCIRCUIT,DI:ML,ANALOG DATA SWITCH	80009	155-0015-01
U2185	155-0014-01			MICROCIRCUIT,DI:ML,ANALOG TO DECIMAL CONV	80009	155-0014-01
U2190	155-0015-01			MICROCIRCUIT,DI:ML,ANALOG DATA SWITCH	80009	155-0015-01
U2232	155-0018-00			MICROCIRCUIT,DI:ZERO LOGIC	80009	155-0018-00
U2244	155-0014-01			MICROCIRCUIT,DI:ML,ANALOG TO DECIMAL CONV	80009	155-0014-01
U2250	156-0032-00			MICROCIRCUIT,DI:4-BIT BINARY COUNTER	01295	SN7493AN
U2260	155-0019-00			MICROCIRCUIT,DI:ML,DECIMAL POINT AND SPACE	80009	155-0019-00
U2270	155-0023-00			MICROCIRCUIT,DI:ML,CHAR GEN NUMERALS	80009	155-0023-00
U2272	155-0024-00			MICROCIRCUIT,DI:ML,CHAR GEN SPCL SYMBOLS	80009	155-0024-00
U2274	155-0025-00			MICROCIRCUIT,DI:ML,CHAR GEN PREFIXES	80009	155-0025-00
U2276	155-0026-00			MICROCIRCUIT,DI:ML,CHAR GEN LETTERS	80009	155-0026-00
U2278	155-0027-00			MICROCIRCUIT,DI:ML,CHAR GEN SPCL ALPHA	80009	155-0027-00
U2284	155-0020-00			MICROCIRCUIT,DI:ML,CHANNEL SW OUTPUT ASSY	80009	155-0020-00
V1099	154-0682-02	B010100	B010199	ELECTRON TUBE:CRT	80009	154-0682-02
V1099	154-0682-12	B010200		ELECTRON TUBE:CRT	80009	154-0682-12
VR541	152-0306-00			SEMICOND DEVICE:ZENER,0.4W,9.1V,5%	81483	1N960B
VR559	152-0304-00			SEMICOND DEVICE:ZENER,0.4W,20V,5%	04713	1N968B
VR851	152-0283-00			SEMICOND DEVICE:ZENER,0.4W,43V,5%	04713	1N976B
VR890	152-0124-00			SEMICOND DEVICE:ZENER,0.5W,9V,5%	04713	1N938A
VR1106	152-0127-00			SEMICOND DEVICE:ZENER,0.4W,7.5V,5%	04713	1N755A
VR1141	152-0149-00			SEMICOND DEVICE:ZENER,0.4W,10V,5%	04713	1N961B
VR1188	152-0285-00			SEMICOND DEVICE:ZENER,0.4W,62V,5%	04713	1N980B
VR1396	152-0195-00			SEMICOND DEVICE:ZENER,0.4W,5.1V,5%	81483	69-6512
VR1400	152-0428-00			SEMICOND DEVICE:ZENER,0.4W,120V,5%	04713	1N987B
VR1446	152-0195-00			SEMICOND DEVICE:ZENER,0.4W,5.1V,5%	81483	69-6512
VR1450	152-0428-00			SEMICOND DEVICE:ZENER,0.4W,120V,5%	04713	1N987B
VR1469	152-0395-00			SEMICOND DEVICE:ZENER,0.4W,4.3V,5%	07910	1N749A
VR2262	152-0405-00			SEMICOND DEVICE:ZENER,1W,15V,5%	99942	1N5567B
VR2263	152-0405-00			SEMICOND DEVICE:ZENER,1W,15V,5%	99942	1N5567B
VR2264	152-0405-00			SEMICOND DEVICE:ZENER,1W,15V,5%	99942	1N5567B

http://manoman.sqhill.com

DIAGRAMS AND CIRCUIT BOARD ILLUSTRATIONS

Symbols and Reference Designators

Electrical components shown on the diagrams are in the following units unless noted otherwise:

Capacitors = Values one or greater are in picofarads (pF). Values less than one are in microfarads (μF).

Resistors = Ohms (Ω).

Symbols used on the diagrams are based on USA Standard Y32.2-1967.

Logic symbology is based on MIL-STD-806B in terms of positive logic. Logic symbols depict the logic function performed and may differ from the manufacturer's data.

The following prefix letters are used as reference designators to identify components or assemblies on the diagrams.

A	Assembly, separable or repairable (circuit board, etc.)	H	Heat dissipating device (heat sink, heat radiator, etc.)	RT	Thermistor
AT	Attenuator, fixed or variable	HR	Heater	S	Switch
B	Motor	HY	Hybrid circuit	T	Transformer
BT	Battery	J	Connector, stationary portion	TC	Thermocouple
C	Capacitor, fixed or variable	K	Relay	TP	Test point
CB	Circuit breaker	L	Inductor, fixed or variable	U	Assembly, inseparable or non-repairable (integrated circuit, etc.)
CR	Diode, signal or rectifier	LR	Inductor/resistor combination	V	Electron tube
DL	Delay line	M	Meter	VR	Voltage regulator (zener diode, etc.)
DS	Indicating device (lamp)	P	Connector, movable portion	Y	Crystal
E	Spark Gap	Q	Transistor or silicon-controlled rectifier	Z	Phase shifter
F	Fuse				
FL	Filter	R	Resistor, fixed or variable		

The following special symbols are used on the diagrams:

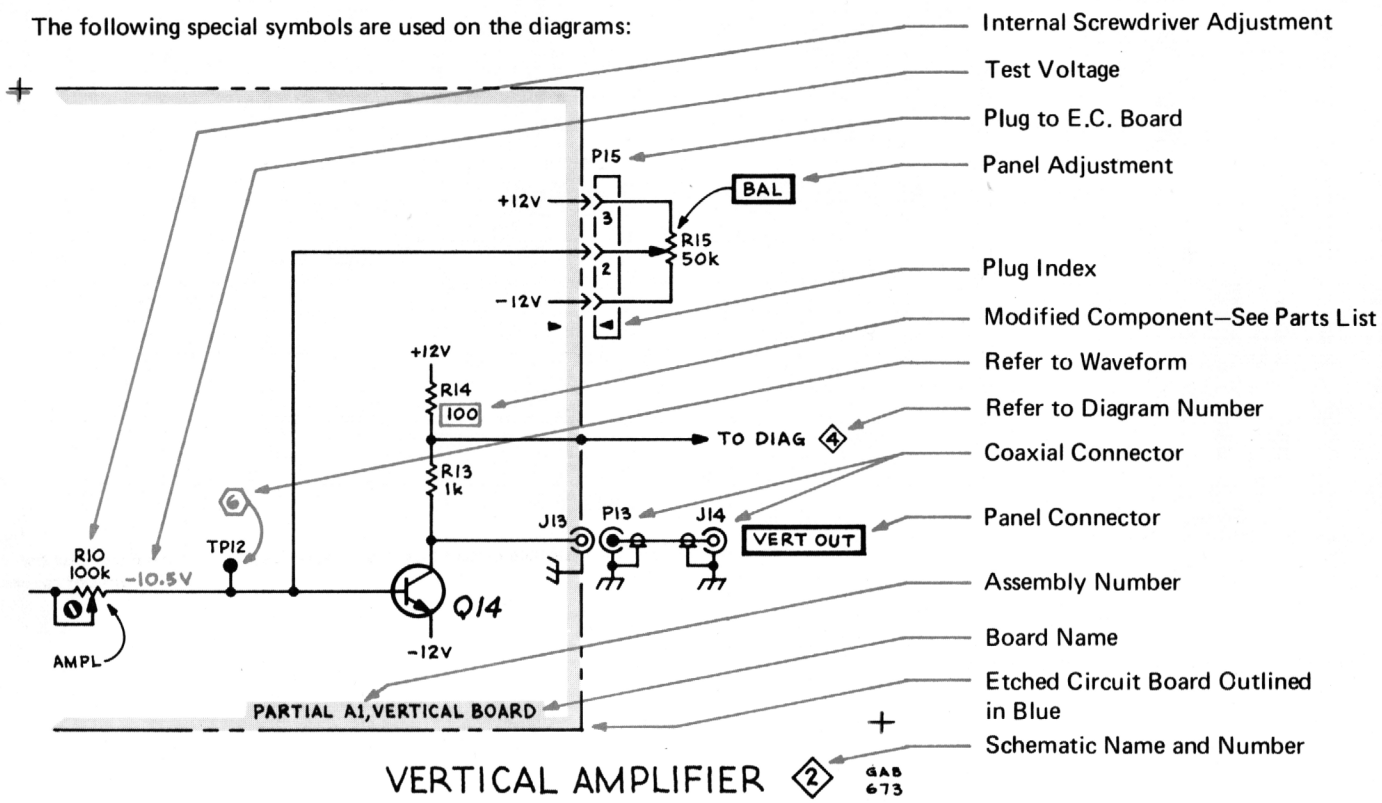

http://manoman.sqhill.com

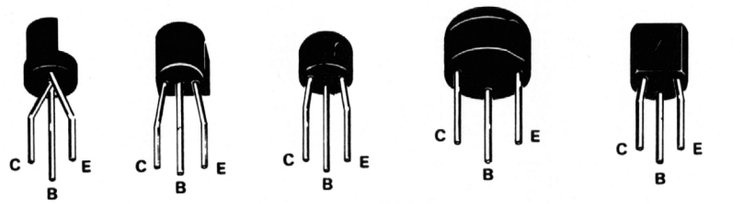

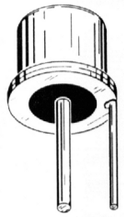

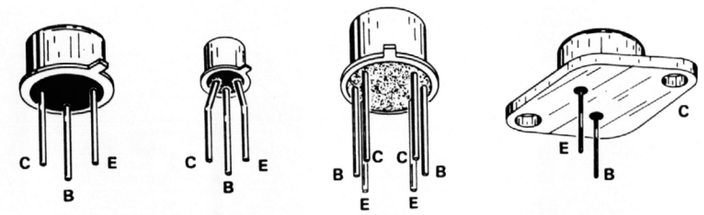

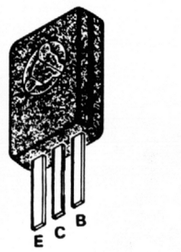

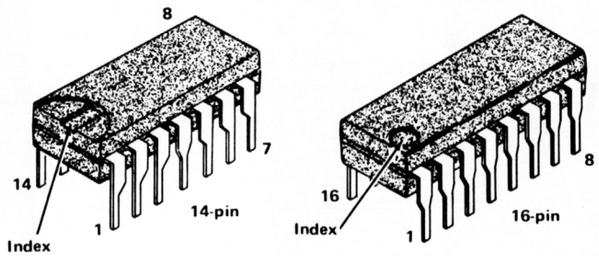

NOTE: Circuit board is keyed with arrow (►) or dot to locate either pin 1 or tab of integrated circuit.

Fig. 7-1. Electrode configuration for semiconductors used in 7313/R7313.

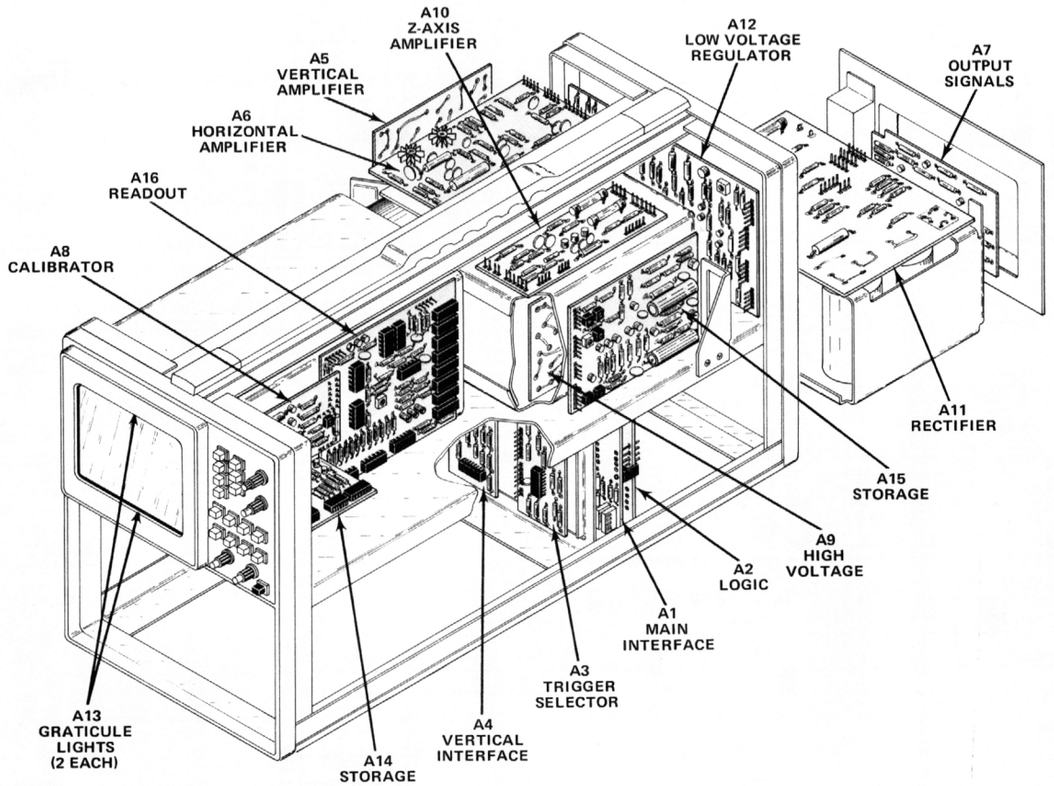

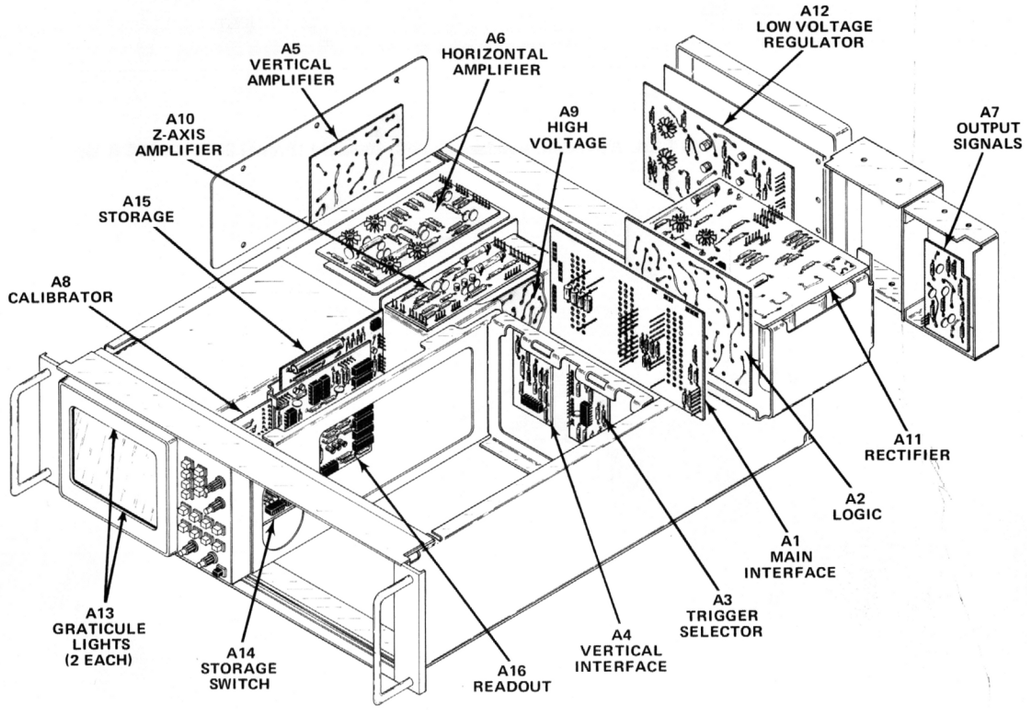

Fig. 7-2. Location of circuit boards in the 7313/R7313.

http://manoman.sqhill.com

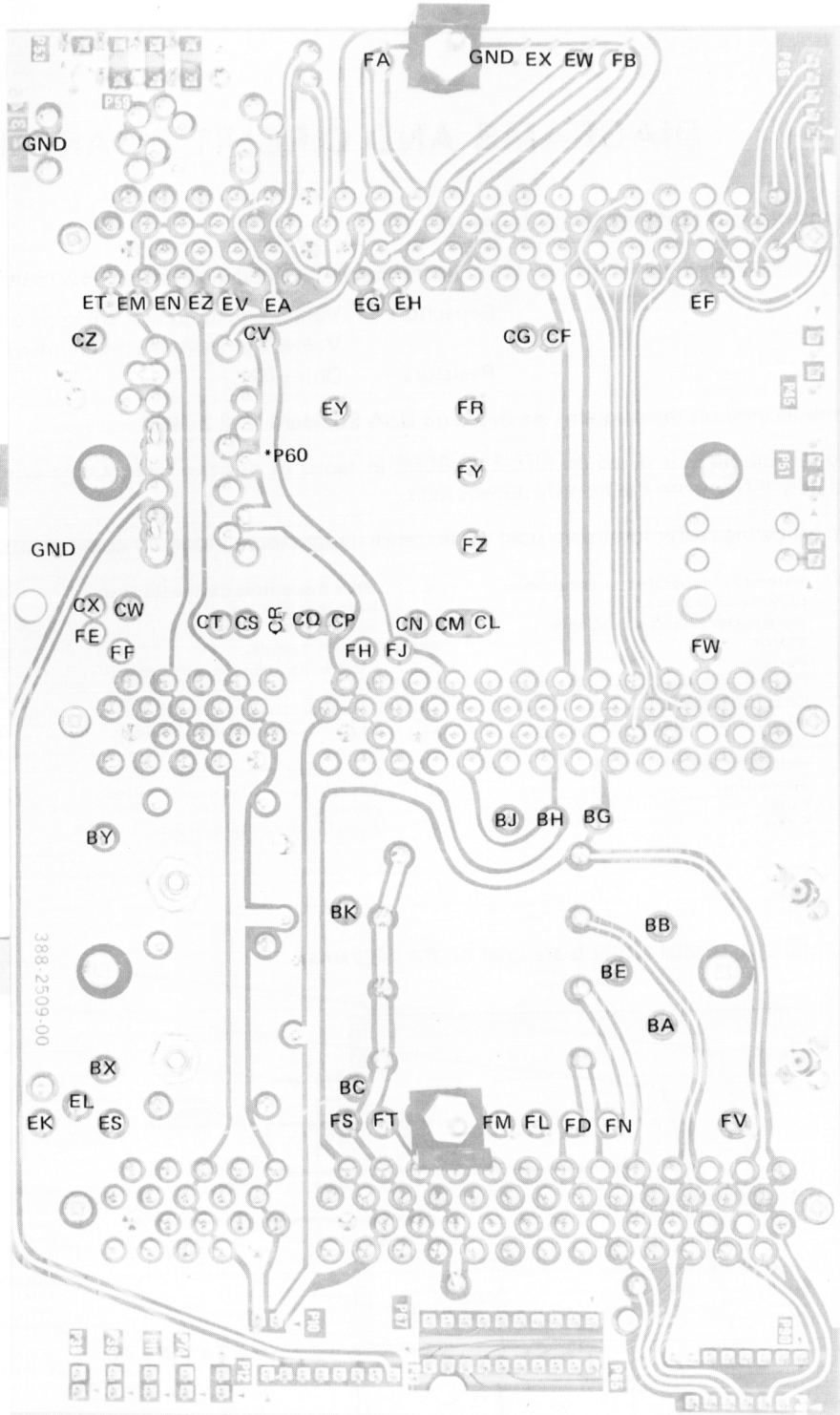

Fig. 7-3B. A1—Main Interface circuit board assembly (rear). ***See Parts List for serial number ranges.**

http://manoman.sqhill.com

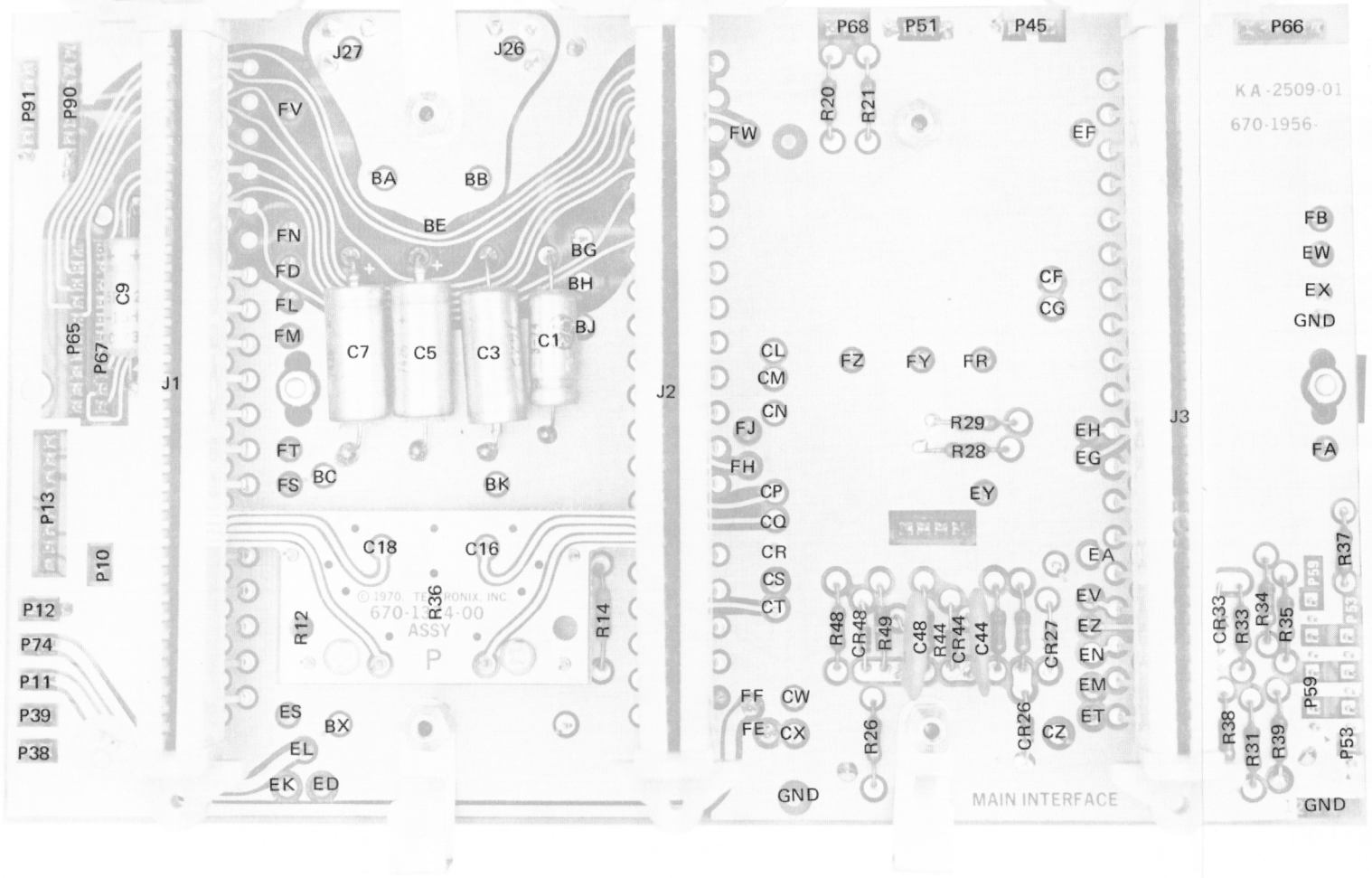

FIG. 7-3A. A1—Main Interface circuit assembly (Front) SN B120000 & Up.

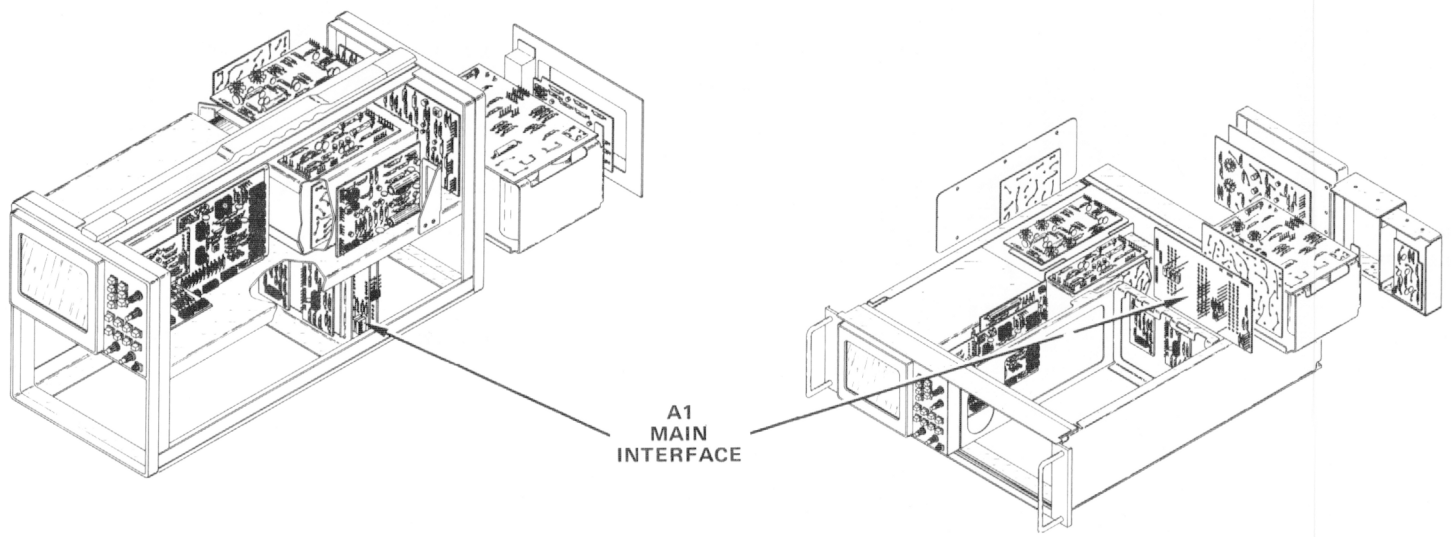

http://www.manuall.com

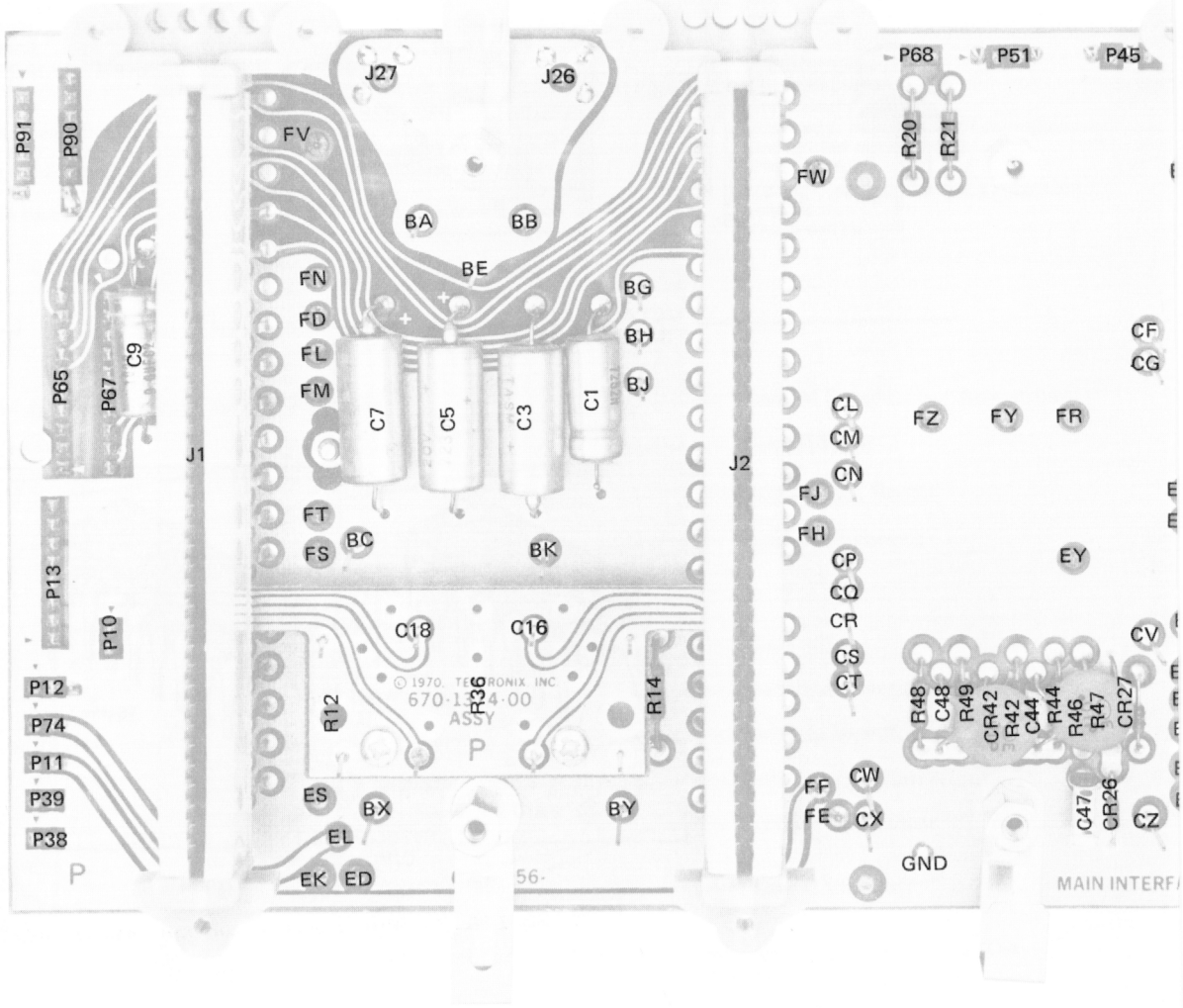

FIG. 7-3C. A1—Main Interface circuit assembly (Front) Below SN B120000,

http://manoman.sqhill.com

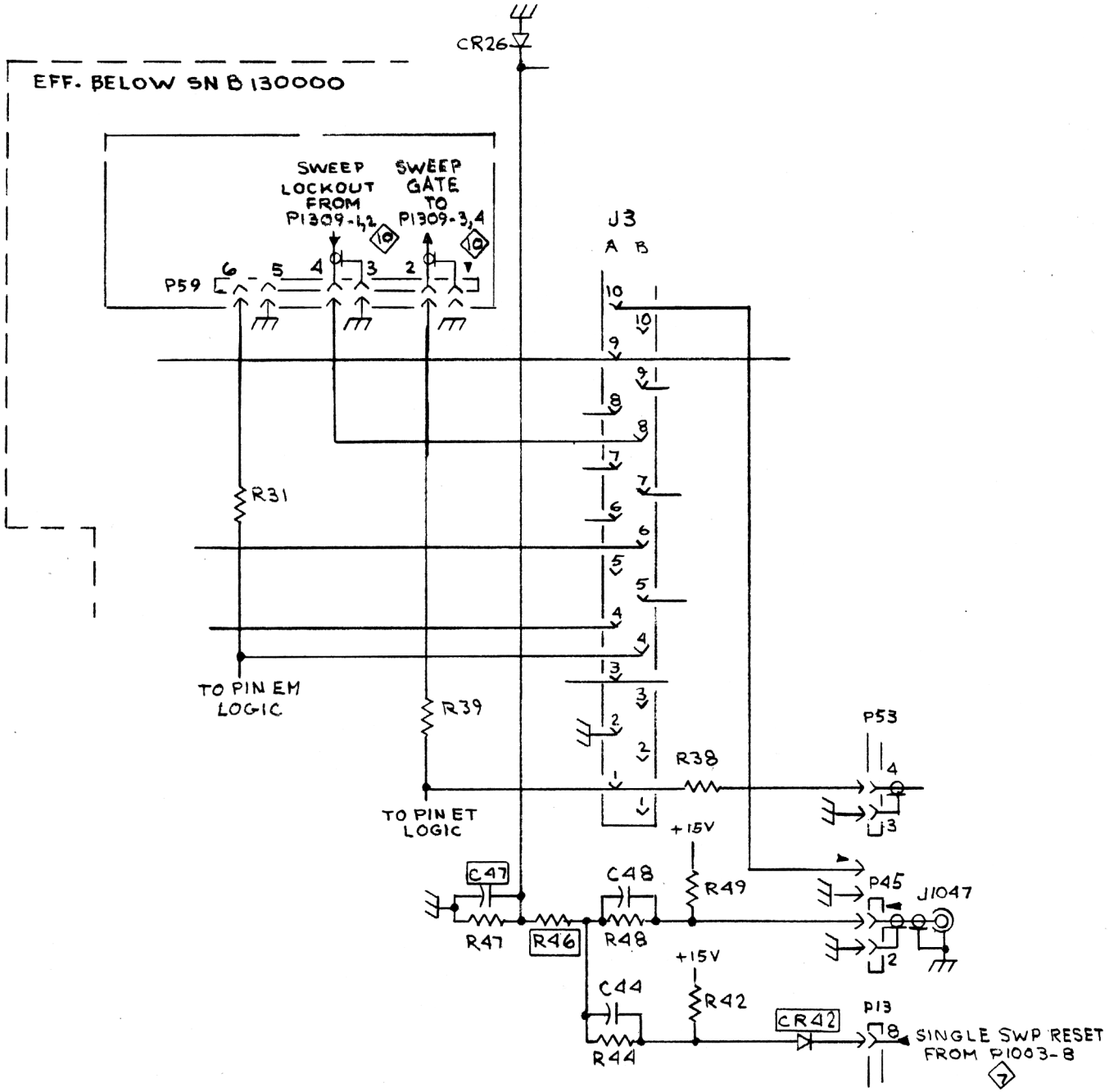

http://manoman.sqhill.com

http://manoman.sqhill.com

7313

REV. C, NOV. 1975

MAIN INTERFACE (1)

J1 (LEFT VERT) A B — TO P2165 RO (11) — P65

J2 (RIGHT VERT) A B — FROM P2167 RO (11) — P67

(HORIZ) J3 A B — TO P2166 RO (11) — P66

ANALOG DATA CH2 COLUMN / ROW; CH1 COLUMN / ROW

FORCE READOUT PLUG-IN MODE

TIME SLOT PULSES 2 1 4 3 6 5 8 7 10 9

TS 1 TS 2 TS 3 TS 4 TS 5 TS 6 TS 7 TS 8 TS 9 TS 10

TO PIN FV LOGIC

TO PIN FW LOGIC

R20 10k

R21 10k P68

SEE PARTS LIST FOR EARLIER VALUES AND SERIAL NUMBER RANGES OF PARTS MARKED WITH BLUE OUTLINE.

+ TRIGGER IN
- TRIGGER IN
+50V DC
-50V DC
+15 V DC
-15V DC
AUX Z AXIS
AUX Z AXIS COMMON
MAINFRAME MODE INFO
AUX Y AXIS

SINGLE SWP RESET
LIGHTS COMMON

+TRIGGER OUT
- TRIGGER OUT
CHASSIS GND
CHASSIS GND
SIGNAL (+)
SIGNAL (-)
SS READY INDICATOR

+5V LIGHTS
DELAY GATE
+5V DC
SWEEP LOCKOUT
INTENSITY LIMIT
MF CHAN SWITCH SIG
CHOP COMMON
ALT DRIVE
CHOP DRIVE

LINE TRIGGER
HOLDOFF
A SWEEP
B SWEEP
UTILITY COMMON

SWEEP GATE

TO 50Ω DELAY LINE (3) — J26 J27

+50V -50V +15V -15V

TO PIN FT / TO PIN FS LOGIC

+5V

C18 .01

TO PIN FJ / TO PIN FH LOGIC

FROM P13-6

FROM PIN CG / FROM PIN CF TRIG SEL

TO PIN EH / TO PIN EG LOGIC

TO PIN BG VERTICAL INTERFACE

CR26 CR27

P60

TO VERTICAL INTERFACE

+15V +5V -15V BH BV BJ BB BE BA BK

SUPPORT POST

TO PIN CL / TO PIN CM TRIG SEL

TO PIN CP / TO PIN CQ TRIG SEL

BS BP BN BT BV BU BR BQ BG BX BC

VERTICAL INTERCONNECT

FROM J3-B16

C16 .01

SWEEP LOCKOUT FROM P1309-1,2 (10)

SWEEP GATE TO P1309-3,4 (10)

P59A P59B

R28 51 R29 51 P10

P51 TO P501 HORIZ AMP (5)

P53 DELAY GATE TO OUTPUT SIGNALS BOARD, P653-5,6 (6)

R34 1.2k

TO PIN EV LOGIC

CR33

TO PIN EZ LOGIC

R33 6.8k

-15V

R26 1.2k

R31 1.2k

R37 1.5k

R35 1.2k

AUX SWEEP GATE TO OUTPUT SIGNALS BOARD, P653-7,8 (6)

R36 2.49k

SWEEP TO OUTPUT SIGNALS BOARD P653-1,2 (6)

TO PIN EM LOGIC

R39 1.5K

R38 1.5K

SWEEP GATE TO OUTPUT SIGNALS BOARD P653-3,4 (6)

TO PIN ET LOGIC

R14 4.99k

R12 4.99k

P90 POWER FROM P900 (9)

-50V -15V +5V +15V +50V

P45

R47 24k

+15V R49 100K R48 1.5K

J1047 EXT SS RESET IN

C48 0.1

CR48

+5V

C44 0.1

+15V R42 1M R44 1.5K

P13 SINGLE SWP RESET FROM P1003-8 (7)

CR44

P91 SENSE FEEDBACK VOLTAGE TO P901 (9)

C1 9 µF C3 100µF C5 100µF C7 100µF C9 9µF

P38 X/Y DISABLE FROM J508 (5)

P39 Z AXIS DISABLE FROM J2139 (11)

FROM J1 A13 B13 FROM J2 A13 B13 +15V +5V

CL CM CQ CP CV CS CT CG CF CR CN

A20 B20 TO J3

-15V

CW RIGHT VERT

CX ALT & RIGHT (VERT MODE)

CZ ADD & CHOP (VERT MODE)

FROM P1003 TRIG SOURCE SWITCH (7)

TO TRIGGER SELECTOR BOARD DIAG (5)

FROM J1 A17 B17 B35 FROM J2 A17 B17 A35

FROM J3 A6 A1 A7 A17 B17 B4

FB EW ED FA FT FS FV FJ FH FW FY EY FZ FR

EZ ET EV EH EG EM

TO J2-A16

FM FN FP FL ES

ADD RIGHT CHOP ALT

FROM P1003 VERT MODE SWITCH (7)

J1050 EXT Z AXIS IN P11

EXT Z AXIS IN

COMMON

FE FF

TO LOGIC BOARD (2)

COMM

Z AXIS OUT

EL EK

FC FD EX EU

P74

TO P704 Z AXIS (6)

R102A 5K

-15V

INTENSITY

P12

PARTIAL MAIN INTERFACE BOARD A1

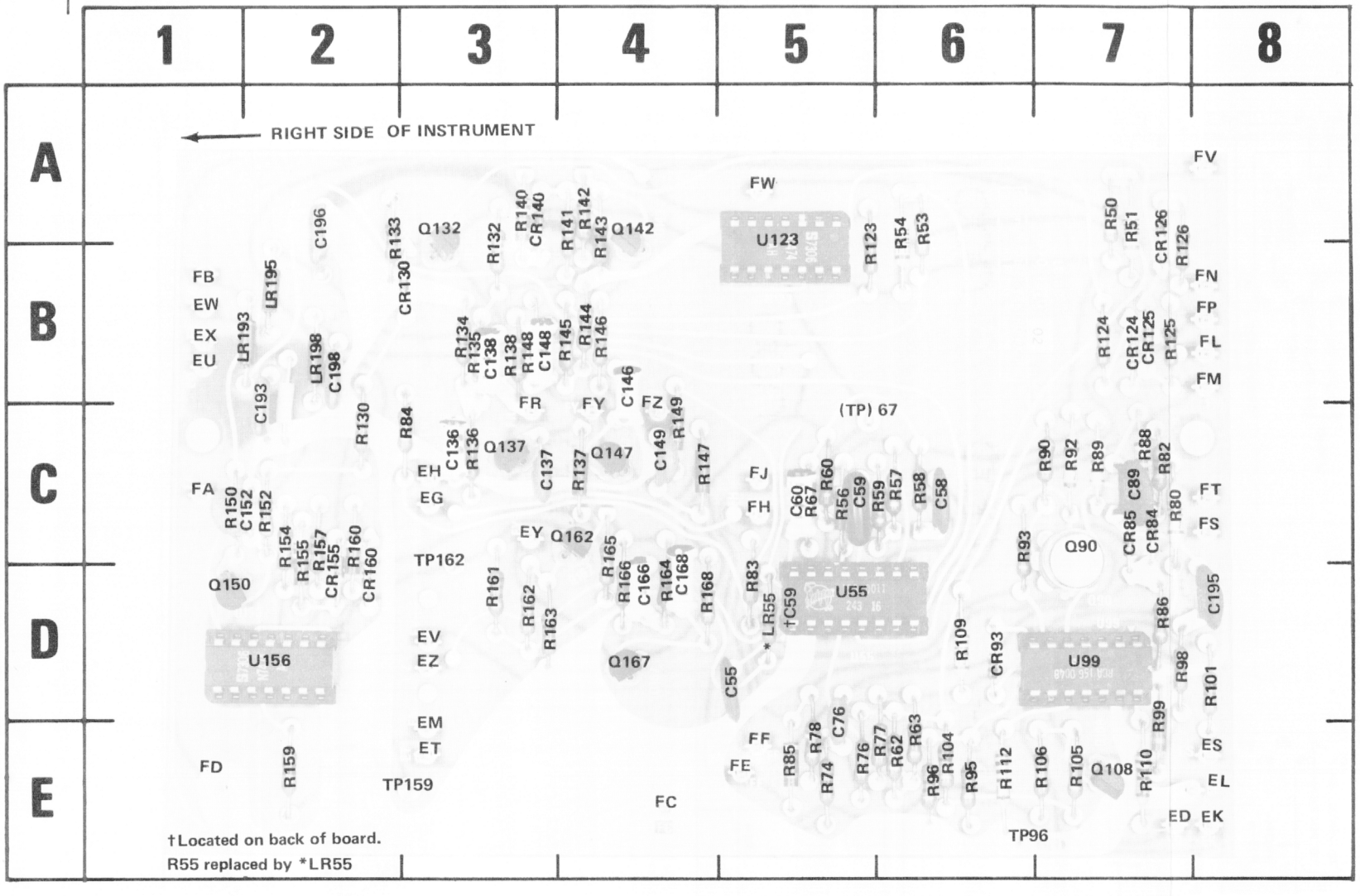

Fig. 7-4. A2—Logic circuit board assembly.

http://manoman.sqhill.com

REV. C, NOV 1975

CKT NO	GRID LOC	CKT NO	GRID LOC	CKT NO	GRID LOC	CKT NO	GRID LOC	CKT NO	GRID LOC	CKT NO	GRID LOC
C55	5D	CR93	6D	Q162	4C	R82	7C	R123	5A	R150	1C
C58	6C	CR124	7B	Q167	4D	R83	5D	R124	7B	R152	2C
C591	5C	CR125	7B			R84	3C	R125	7B	R154	2C
C60	5C	CR126	7A	R50	7A	R85	5E	R126	7A	R155	2C
C76	5D	CR130	2B	R51	7A	R86	7D	R130	2C	R157	2C
C89	7C	CR140	3A	R53	6A	R88	7C	R132	3A	R159	2E
C136	3C	CR155	2C	R54	6A	R89	7C	R134	3B	R160	2C
C147	3C	CR160	2D	R55	5D	R90	7C	R135	3B	R161	3D
C138	3B			R56	5C	R92	7C	R136	3C	R162	3D
C146	4B	LR193	1B	R57	6C	R93	6C	R137	4C	R163	3D
C148	3B	LR195	2B	R59	5C	R95	6E	R138	3B	R164	4D
C149	4C	LR197	2B	R58	6C	R96	6E	R140	3A	R165	4C
C152	1C	LR198	2B	R60	5C	R98	7D	R141	4A	R166	4D
C166	4D			R62	6E	R99	7D	R142	4A	R168	4D
C168	4D	Q90	7C	R63	6E	R101	8D	R143	4A	TP67	5C
C193	2C	Q108	7E	R67	5C	R104	6E	R145	4B	TP96	7E
C195	8D	Q132	3A	R74	5E	R105	7E	R144	4B	TP159	3E
C196	2A	Q137	3C	R76	5E	R106	7E	R146	4B	TP162	3C
C198	2B	Q142	4A	R77	6E	R109	6D	R147	4C	U55	5D
		Q147	4C	R78	5E	R110	7E	R148	3B	U99	7D
CR84	7C	Q150	1D	R80	7C	R112	6E	R149	4C	U123	5A
CR85	7C									U156	2D

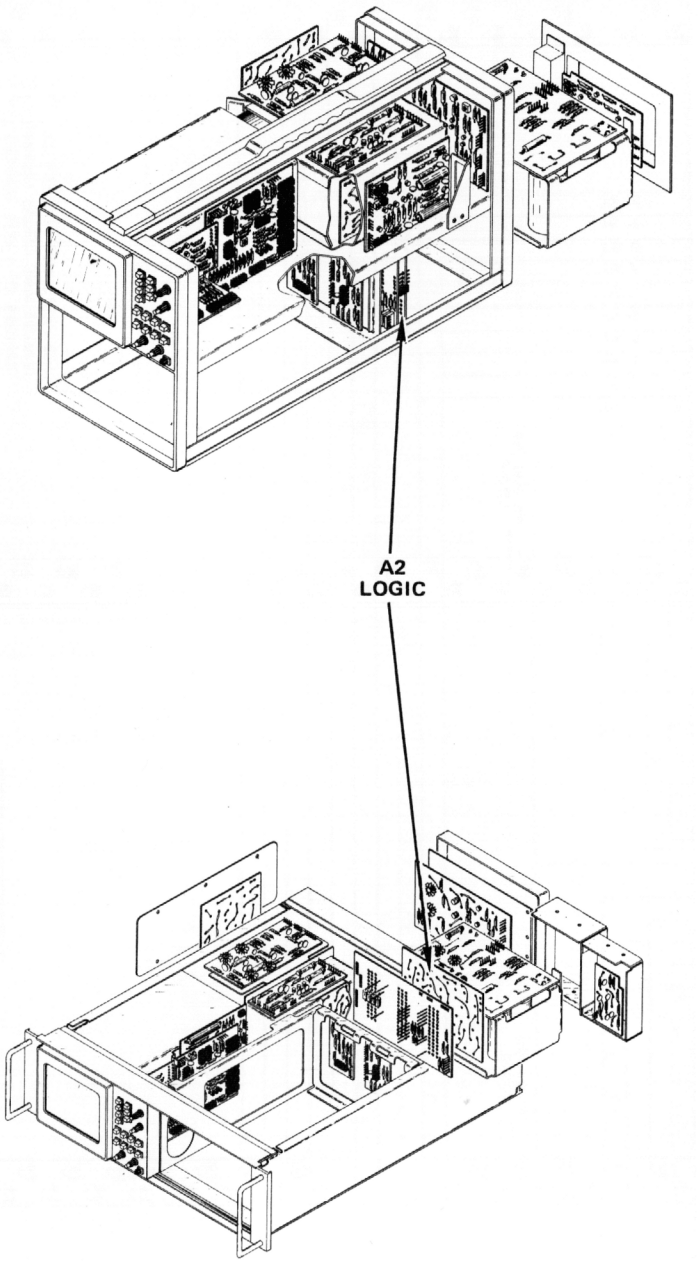

http://manoman.sqhill.com

VOLTAGE AND WAVEFORM CONDITIONS

WARNING

Dangerous potentials exist at several points throughout this instrument. When the instrument is operated with the covers removed, do not touch exposed connections or components. Some transistors have voltages present on their cases. Disconnect the power source before cleaning the instrument or replacing parts.

The voltages and waveforms shown on this diagram were obtained by using the recommended test equipment and test set-up conditions listed below.

RECOMMENDED TEST EQUIPMENT

Item	Specifications		Recommended Type
Oscilloscope	Frequency Response Deflection Factor Input Impedance Sweep Rate	Dc to 65 MHz 5 mV to 5 V/div 10 MΩ, 20 pF 500 ns	Tektronix 7603 or 7313 equipped with 7A15A Amplifier and 7B-series time-base unit, or equivalent. (7A13 Differential Comparator used in place of 7A15A for calibrated offset voltages.)
Probe	Fast rise 10X attenuation probe compatible with the vertical amplifier of the test oscilloscope.		Tektronix P6053B, or equivalent.
Voltmeter (Non-Loading Digital Multimeter)	Input Impedance Range	10 MΩ 0 - 500 V	Tektronix 7D13 Digital Multimeter (test oscilloscope must have readout system); or DM501 Digital Multimeter with TM 501 or TM503 Power Module, or equivalent.

NOTE

Remove power unit to expose the logic circuit board (refer to the Maintenance Section for power unit removal).

VOLTAGE MEASUREMENTS

Voltage measurements on this diagram were made under the following conditions:

Set front-panel controls to mid-range.
Set VERT MODE for CHOP.
Set TRIG SOURCE for VERT MODE.
Set storage controls for non-store operation.
No plug-in units are installed.
Voltmeter common is connected to chassis ground.

WAVEFORMS

Waveforms shown on this diagram were obtained under the following conditions:

7313 OSCILLOSCOPE UNDER TEST. Front-panel controls are set the same as for voltage measurements. A 7A15A amplifier unit and a 7B53A Time-Base unit are installed in the mainframe under test. The test oscilloscope 4 volt calibrator signal is applied to the amplifier unit. The amplifier unit is set for 1 V/division deflection centered on the crt. The 7B53A is set for a triggered sweep and 1 ms/division sweep rate.

TEST OSCILLOSCOPE. The test oscilloscope is internally triggered and is ac coupled.

Tolerances of voltages and waveforms shown are within 20%. Calibrated offset voltages are marked on waveforms at center vertical graticule line. These voltages indicate the comparison voltage of the 7A13.

http://manoman.sqhill.com

RIGHT — FN
CHOP — FP
ALT — FL
VERT MODE SWITCH INFO FROM P13
ADD — FM
(LEFT) PLUG-IN MODE — FROM B35 J1 — FV
(RIGHT) PLUG-IN MODE — FROM B35 J2 — FW
(SWEEP) HOLDOFF — FROM B4 J3 — EM
INTENSITY LIMIT — FROM A7 J3 — EV
AUX Z AXIS — FROM AI7 J1 — FT
AUX Z AXIS — FROM AI7 J2 — FJ
FROM AI7 J3 — EH
EXT Z AXIS — FROM P11-1 — FE
COMMON — FROM P11-2 — FF
AUX Z AXIS COMMON — FROM BI7 J1 — FS
FROM BI7 J2 — FH
FROM BI7 J3 — EG
SWEEP GATE — FROM AI J3 — ET
INTENSITY — R102 5K — ES — SEE DIAG 1
Z AXIS DISABLE — FROM P39-1 — ED
SEE DIAG 1 PARTIAL MAIN INTERFACE A1

CHOP LOGIC
U55 -0011-
CLOCK GENERATOR

LR55 3.9μH 7.5Ω
C55 .01
R62 10K
R63 1K
R50 2.2K
R51 1.0K
R53 2.2K
R54 1.0K
C59 200
C60 24
C58 .01
R56 562
R57 5.76K
R58 100
R59 8.45K
R61 5.1K
TP 67
TP 159
C67 200
R67 5.1K

R123 1K
U123A ½7474
U123B ½7474
R126 1K
CR126
R125 1K
CR125
CR130
R130 1K
CR124
R124 510
R152 100
CR155
R155 390
R140 390
CR140
R150 10K
Q150
R154 22K
C152 .001
R159 51
R157 1K
U156A ½7474
U156B ½7474
R160 390
CR160
TP 162
R109 3.32K
R74 51
R76 2.2K
R77 3.6K
C76 .001
R78 3.9K
R80 4.75K
R82 51
R83 51
R84 51
R85 470
CR84
CR85
R88 2.43K
C89 .01
R89 91
R90 3.6K
Q90
R92 1.24K
R93 1K
CR93
U99C ⅕ 3046
U99D ⅕ 3046
R112 100.0
U99B ⅕ 3046
U99A ⅕ 3046
U99E ⅕ 3046
R95 1.5K
R96 510
R98 510
R99 220
R101 3K
R110 100.0
R104 10K
R105 4.7K
R106 27K
Q108
R86 10

Q132
R135 12K
R132 2.2K
R133 1K
R136 680
C136 2.7
C138 8
R134 820
R137 220
C137 .001
Q137
R138 4.7K
FR
TO B7 J1,J2 1
TO PIN BX VERTICAL INTERFACE 3
TO PIN CT TRIGGER SELECTOR 3
MF CHAN SWITCH SIGNAL

Q142
R141 1.2K
R145 12K
R142 2.2K
R143 1K
R146 680
C146 2.7
C148 8
R144 820
R147 180
Q147
R148 4.7K
FY
TO A5 J1,J2

C149 .001
R149 10
FZ
TO A6 J1,J2
TO A6 J3
EZ

Q162
R161 1.2K
R162 2.2K
R163 1K
R165 12K
R166 680
C166 2.7
C168 8
R164 820
Q167
R168 4.7K
EY
TO B6 J1,J2,J3

EK — Z AXIS OUT
EL — COMMON
FB — +15V — C193 0.2 — LR193 3.9μH — 7.5
EW — +5V — C196 0.2, C195 .01 — LR195 3.9μH — 7.5
EX — GND
EU — GND
FA — -15V — C198 0.2 — LR198 3.9μH — 7.5
FC — GND
FD — GND
TP 96

SEE PARTS LIST FOR EARLIER VALUES AND SERIAL NUMBER RANGES OF PARTS MARKED WITH BLUE OUTLINE.

SEE PARTS LIST FOR SEMICONDUCTOR TYPES.

SEE DIAG 1 PARTIAL MAIN INTERFACE A1

LOGIC BOARD A2

7313

REV. B, SEPT. 1974

LOGIC 2

http://manoman.sqhill.com

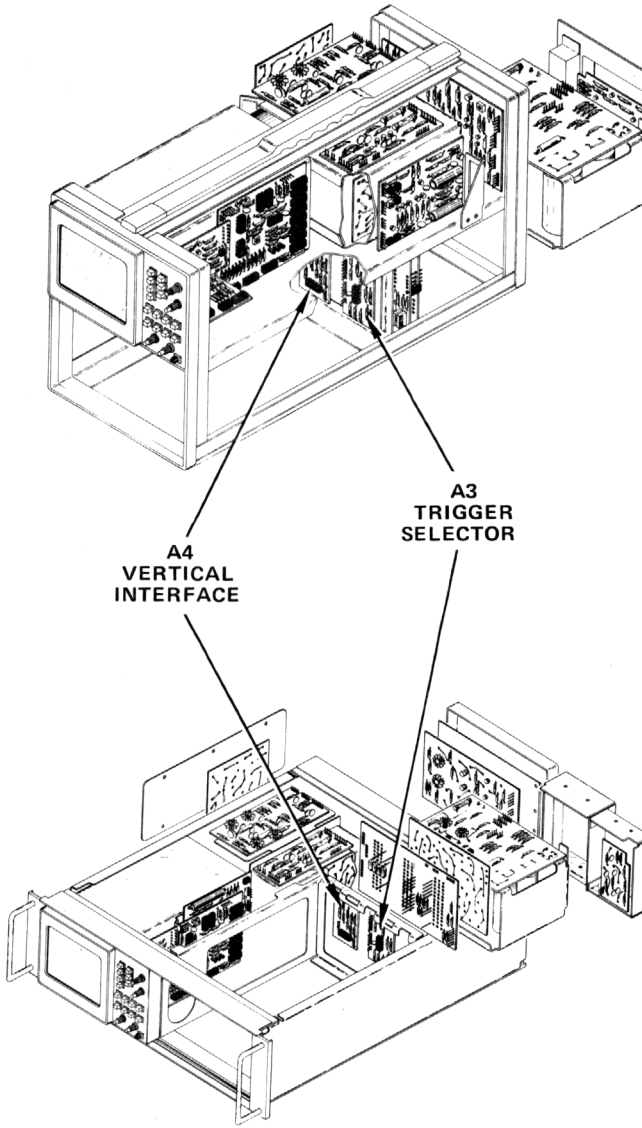

http://manoman.sqhill.com

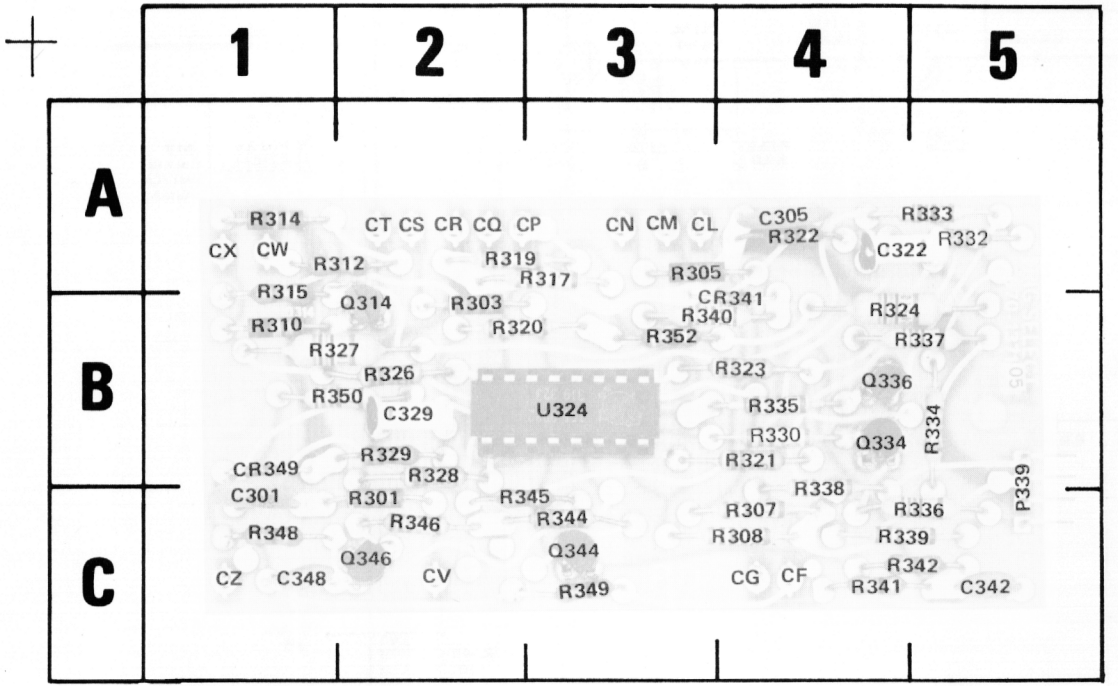

Fig. 7-5. A3—Trigger Selector circuit board assembly.

CKT NO	GRID LOC	CKT NO	GRID LOC	CKT NO	GRID LOC
C301	1C	R303	2B	R330	4B
C305	4A	R305	3A	R332	5A
C322	4A	R307	4C	R333	5A
C329	2B	R308	4C	R335	4B
C342	5C	R310	1B	R337	5B
C348	1C	R312	1A	R338	4B
		R314	1A	R339	4C
CR341	4B	R315	1A	R340	3B
CR349	1B	R317	3A	R341	4C
		R319	2A	R342	4C
P339	5C	R320	2B	R344	3C
		R321	4B	R345	3C
Q314	2B	R322	5A	R346	2C
Q334	4B	R323	4B	R348	1C
Q336	4B	R324	4B	R349	3C
Q344	3C	R326	2B	R350	2B
Q346	2C	R327	2B	R352	3B
		R328	2B		
R301	2C	R329	2B	U324	3B

http://manoman.sqhill.com

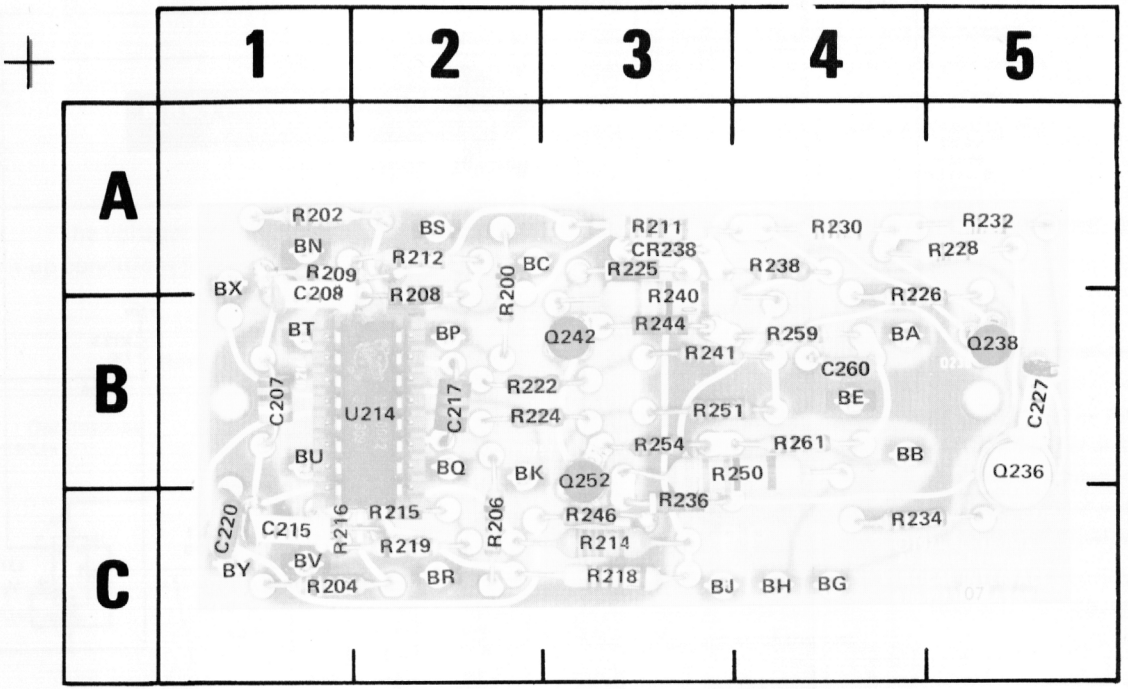

Fig. 7-6. A4—Vertical Interface circuit board assembly.

CKT NO	GRID LOC	CKT NO	GRID LOC	CKT NO	GRID LOC
C207	1B	R206	2C	R234	4C
C208	1A	R208	2A	R236	3C
C215	1C	R209	1A	R238	4A
C217	2B	R211	3A	R238	2B
C220	1C	R212	2A	R240	3B
C227	5B	R214	3C	R241	3B
C260	4B	R215	2C	R244	3B
C301	1A	R216	1C	R247	3C
CR238	3A	R218	3C	R250	3B
		R219	2C	R251	3B
Q236	5B	R222	2B	R254	3B
Q238	5B	R224	2B	R259	4B
Q242	3B	R225	3A	R261	4C
Q252	3B	R226	4B	R301	1A
R200	2A	R228	5A		
R202	1A	R230	4A		
R204	1C	R232	5A	U214	2B

http://manoman.sqhill.com

VOLTAGE AND WAVEFORM CONDITIONS

WARNING

Dangerous potentials exist at several points throughout this instrument. When the instrument is operated with the covers removed, do not touch exposed connections or components. Some transistors have voltages present on their cases. Disconnect the power source before cleaning the instrument or replacing parts.

The voltages and waveforms shown on this diagram were obtained by using the recommended test equipment and test set-ups listed below.

RECOMMENDED TEST EQUIPMENT

Item	Specifications		Recommended Type
Voltmeter (Non-Loading Digital Multimeter)	Input Impedance	10 MΩ	Tektronix 7D13 Digital Multimeter (test oscilloscope must have readout system); or DM501 Digital Multi-Meter with TM501 or TM503 Power Module, or equivalent.

VOLTAGE MEASUREMENTS

Voltage measurements on this diagram were made under the following conditions:

Set front-panel controls (knob type) to mid-range.

Set VERT MODE for CHOP.

Set TRIG SOURCE for VERT MODE.

Set storage controls for non-store operation.

No plug-in units are installed.

Voltmeter common is connected to chassis ground.

http://manoman.sqhill.com

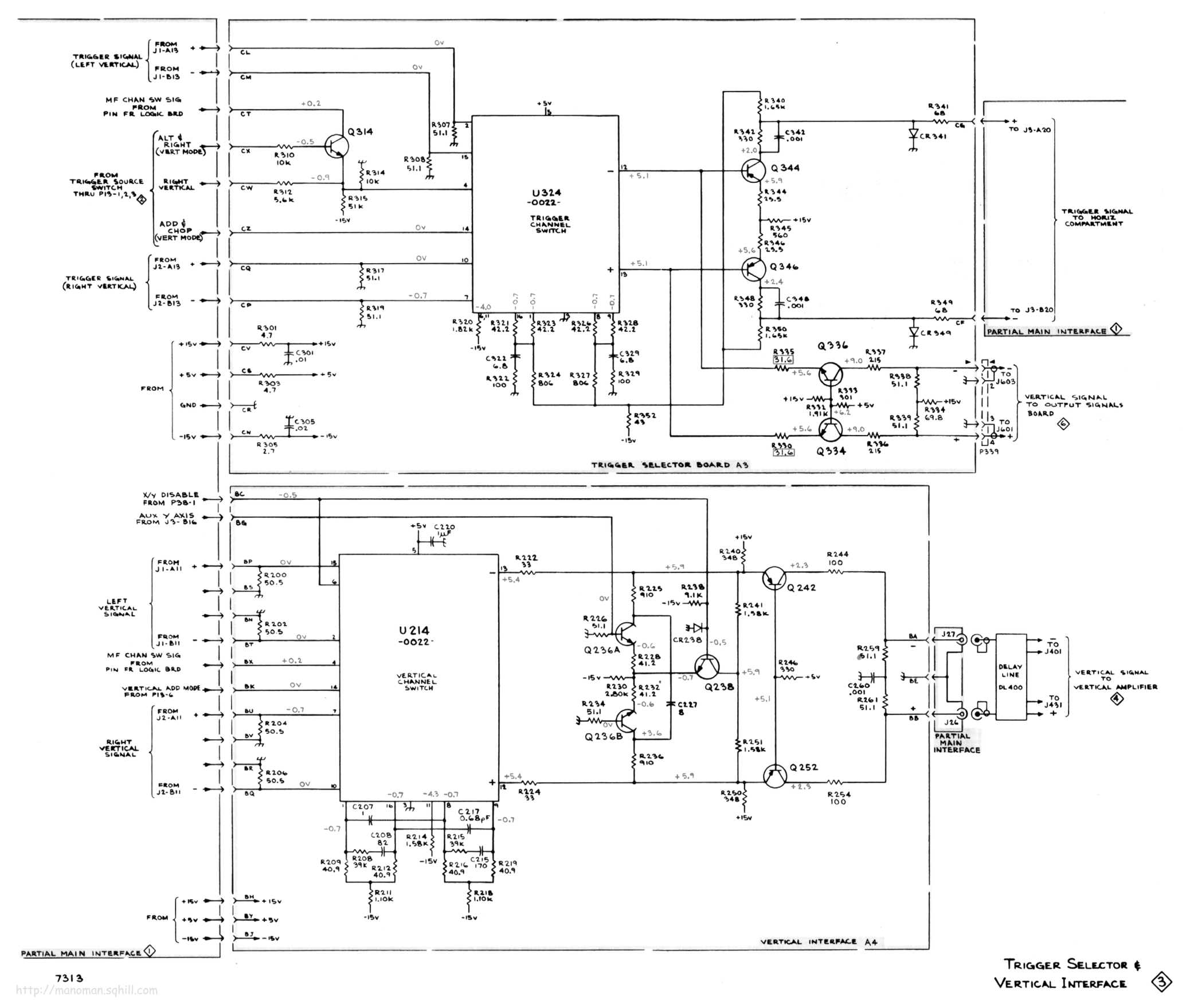

7313

http://manoman.sqhill.com

TRIGGER SELECTOR & VERTICAL INTERFACE 3

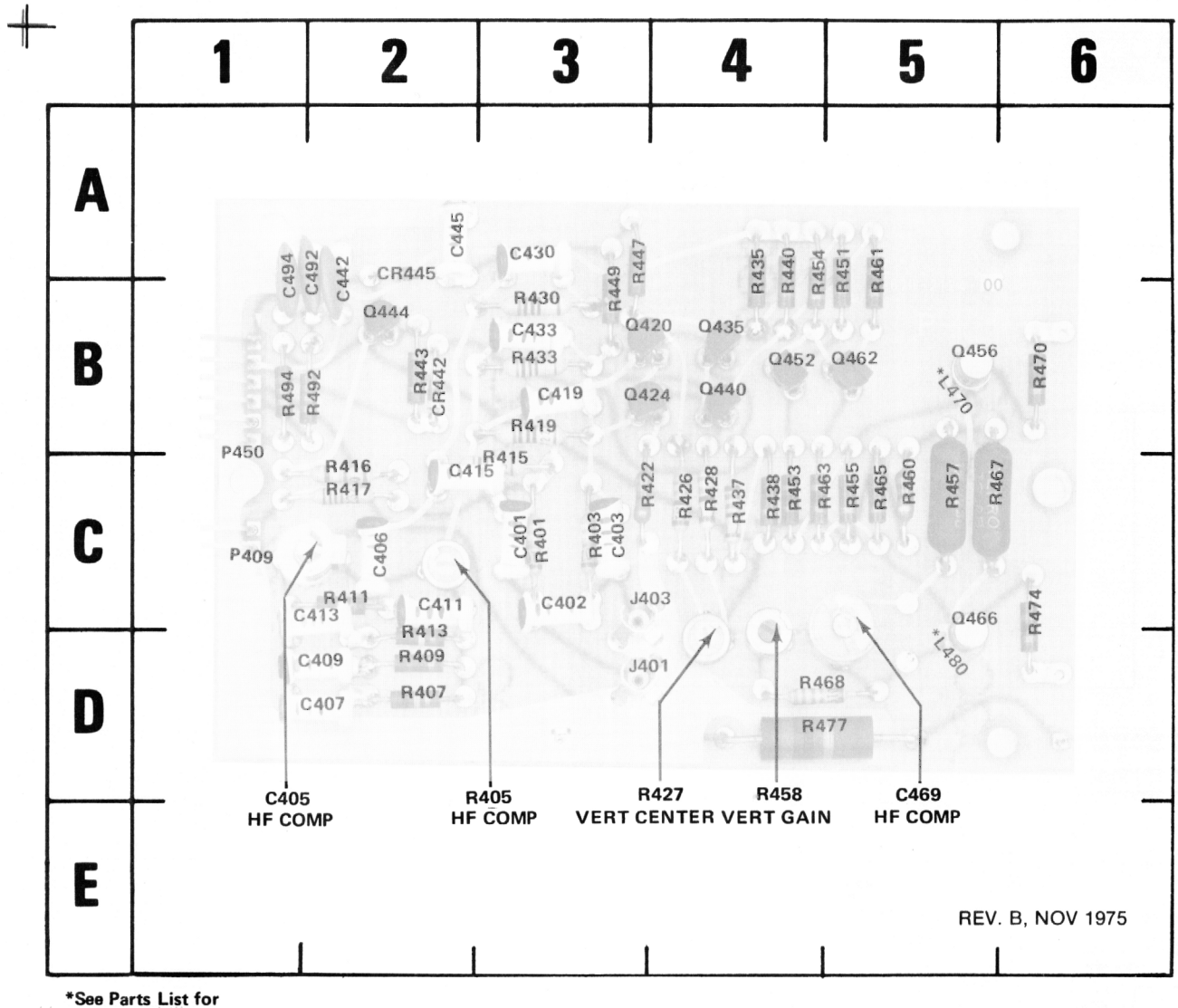

REV. B, NOV 1975

*See Parts List for serial number ranges.

Fig. 7-7. A5—Vertical Amplifier circuit board assembly.

CKT NO	GRID LOC	CKT NO	GRID LOC	CKT NO	GRID LOC	CKT NO	GRID LOC
C401	3C	J401	3D	R411	2C	R453	4C
C402	3C	J403	3C	R413	2C	R454	4A
C403	3C			R415	3C	R455	5C
C405	2C	L470	5B	R416	2C	R457	5C
C406	2C	L480	5D	R417	2C	R458	4C
C407	2D			R419	3B	R460	5C
C409	2D	P409	1C	R422	3C	R461	5A
C411	2C	P450	1B	R426	4C	R463	4C
C413	2C			R427	4C	R465	5C
C415	2C	Q420	3B	R428	4C	R467	5C
C419	3B	Q424	3B	R430	3B	R468	4D
C430	3A	Q435	4B	R433	3B	R470	6B
C433	3B	Q440	4B	R435	4A	R474	6C
C442	2A	Q444	2B	R437	4C	R477	4D
C445	2A	Q452	4B	R438	4C	R492	2B
C469	5C	Q456	5B	R440	4A	R494	1B
C492	2A	Q462	5B	R443	2B		
C494	1A	Q466	5C	R447	3A		
CR442	2B	R401	3C	R449	3B		
CR445	2B	R403	3C	R451	5A		
		R405	2C				
		R407	2D				
		R409	2D				

REV. B, NOV 1975

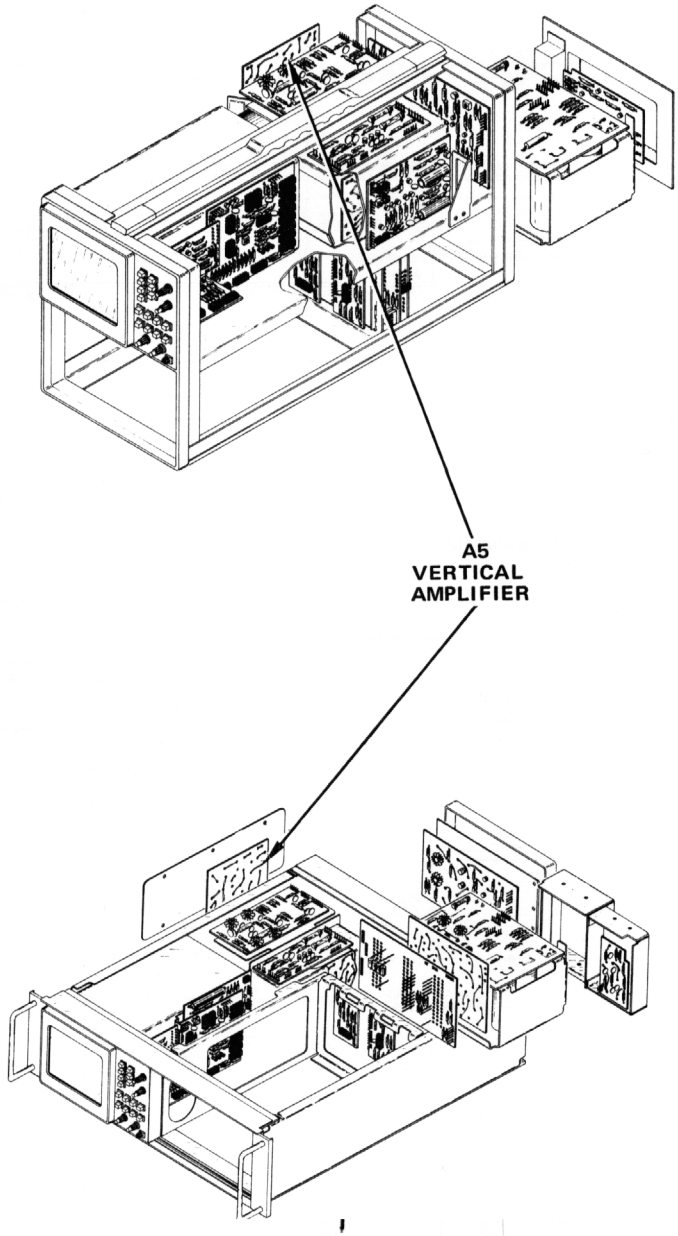

http://manoman.sqhill.com

VOLTAGE AND WAVEFORM CONDITIONS

WARNING

Dangerous potentials exist at several points throughout this instrument. When the instrument is operated with the covers removed, do not touch exposed connections or components. Some transistors have voltages present on their cases. Disconnect the power source before cleaning the instrument or replacing parts.

The voltages and waveforms shown on this diagram were obtained by using the recommended test equipment and test set-ups listed below.

RECOMMENDED TEST EQUIPMENT

Item	Specifications		Recommended Type
Oscilloscope	Frequency Response Deflection Factor Input Impedance Sweep Rate	Dc to 65 MHz 5 mV to 5 V/ div 10 MΩ, 20 pF 500 ns	Tektronix 7603 or 7313 equipped with 7A15A Amplifier and 7B-series time-base unit, or equivalent. (7A13 Differential Comparator used in place of 7A15A for calibrated offset voltages.
Probe	Fast rise 10X attenuation probe compatible with the vertical amplifier of the test oscilloscope.		Tektronix P6053B, or equivalent.
Voltmeter (Non-Loading Digital Multimeter)	Input Impedance Range	10 MΩ 0 - 500 V	Tektronix 7D13 Digital Multimeter (test oscilloscope must have readout system); or DM501 Digital Multi-Meter with TM 501 or TM503 Power Module, or equivalent.

VOLTAGE MEASUREMENTS

Voltage measurements on this diagram were made under the following conditions:

Set front-panel controls to mid-range.

Set VERT MODE for CHOP.

Set TRIG SOURCE for VERT MODE.

Set storage controls for non-store operation.

No plug-in units are installed.

Voltmeter common is connected to chassis ground.

WAVEFORMS

Waveforms shown on this diagram were obtained under the following conditions:

7313 OSCILLOSCOPE UNDER TEST. Front-panel controls are set the same as for voltage measurements. A 7A15A amplifier unit and a 7B53A Time-Base unit are installed in the mainframe under test. The test oscilloscope 4 volt calibrator signal is applied to the amplifier unit. The amplifier unit is set for 1 V /division deflection centered on the crt. The 7B53A is set for a triggered sweep and 1 ms/division sweep rate.

TEST OSCILLOSCOPE. The test oscilloscope is internally triggered and ac coupled.

Tolerances of voltages and waveforms shown are within 20%. Calibrated offset voltages are marked on waveforms at center vertical graticule line. These voltages indicate the comparison voltage of the 7A13.

http://manoman.sghill.com

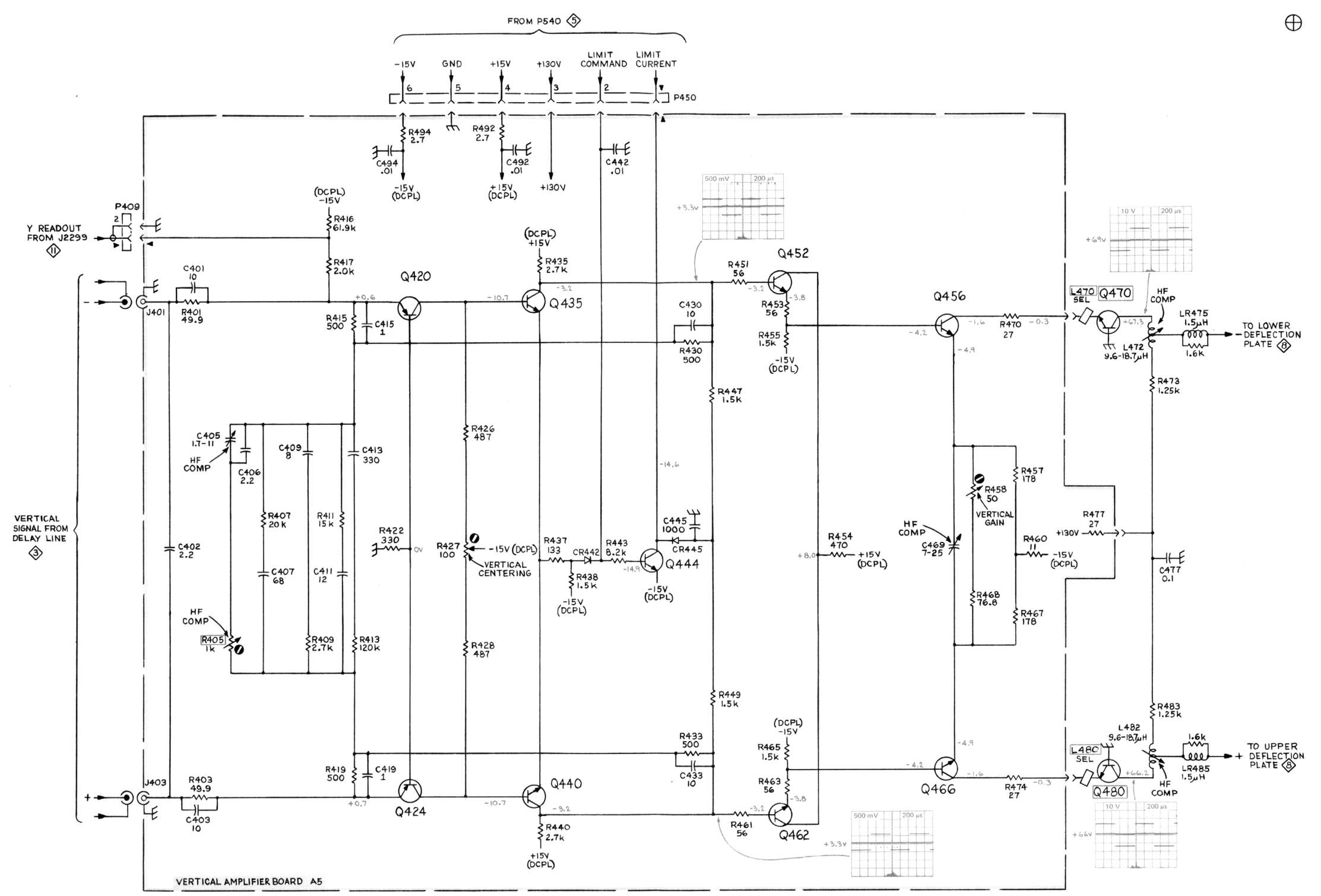

http://manoman.sghill.com

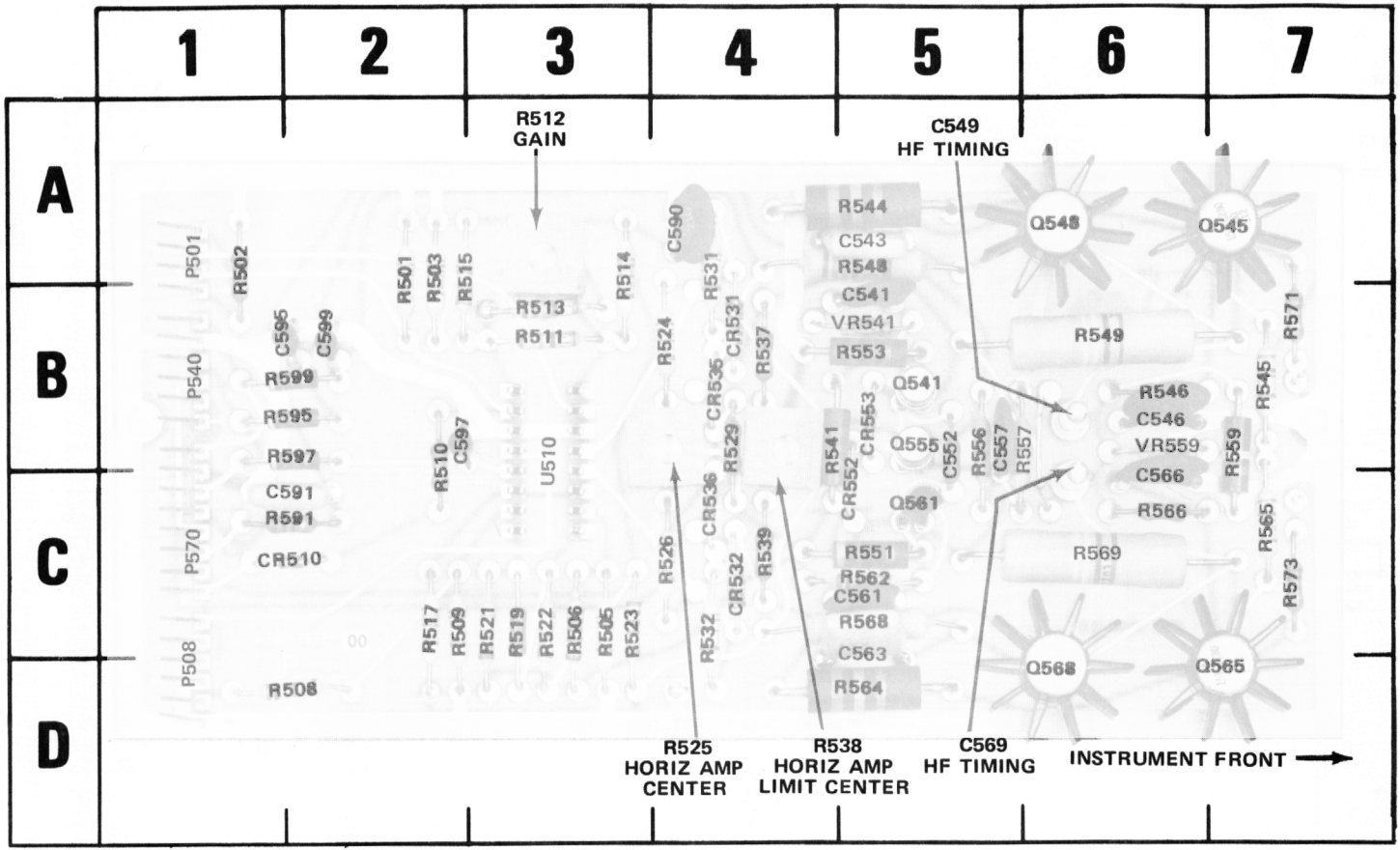

Fig. 7-8. A6—Horizontal Amplifier circuit board assembly.

http://manoman.sqhill.com

CKT NO	GRID LOC	CKT NO	GRID LOC	CKT NO	GRID LOC
C543	5A	Q561	5C	R538	4C
C546	6B	Q565	7D	R539	4C
C549	6C	Q568	6D	R541	5C
C541	5B			R544	5A
C552	5B	R501	2A	R545	7B
C557	5B	R502	1A	R548	5A
C561	5C	R503	2A	R551	5C
C563	5C	R505	3C	R546	6B
C566	6C	R506	3C	R549	6B
C569	6B	R508	2D	R552	5B
C590	4A	R509	2C	R553	5B
C591	2C	R510	2B	R556	5B
C595	1B	R511	3B	R559	7B
C597	2B	R512	3A	R562	5C
C599	2B	R513	3B	R564	5D
		R514	3A	R565	7C
CR510	2C	R515	2A	R566	6C
CR522	5C	R517	2C	R568	5C
CR531	4B	R519	3C	R569	6C
CR532	4C	R521	3C	R571	7B
CR535	4B	R522	3C	R573	7C
CR536	4C	R523	3C	R591	2C
CR553	5B	R524	4B	R595	2B
		R525	4C	R597	2B
Q541	5B	R526	4C	R599	2B
Q545	7A	R529	4B		
Q548	6A	R531	4A	U510	3B
Q555	5B	R532	4C	VR541	5B
		R537	4B	VR559	6B

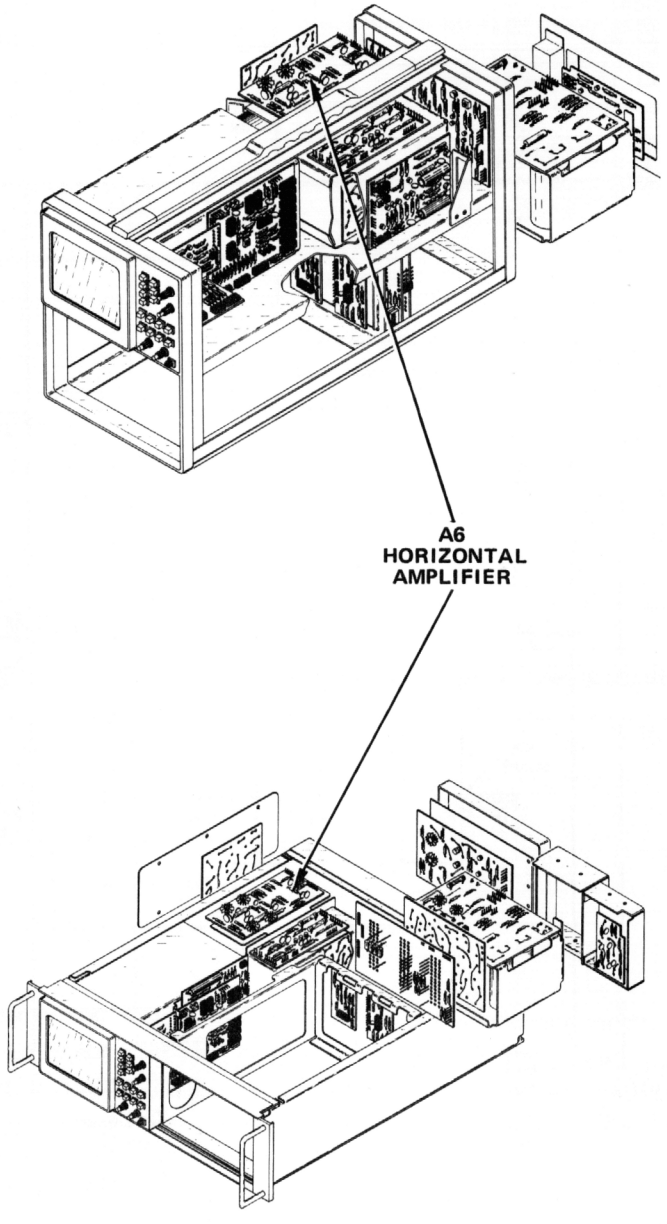

http://manoman.sqhill.com

VOLTAGE AND WAVEFORM CONDITIONS

WARNING

Dangerous potentials exist at several points throughout this instrument. When the instrument is operated with the covers removed, do not touch connections or components. Some transistors have voltages present on their cases. Disconnect the power source before cleaning the instrument or replacing parts.

The voltages and waveforms shown on this diagram were obtained by using the recommended test equipment and test set-ups listed below.

RECOMMENDED TEST EQUIPMENT

Item	Specifications		Recommended Type
Oscilloscope	Frequency Response Deflection Factor Input Impedance Sweep Rate	Dc to 65 MHz 5 mV to 5 V/ div 10 MΩ, 20 pF 500 ns	Tektronix 7603 or 7313 equipped with 7A15A Amplifier and 7B-series time-base unit, or equivalent. (7A13 Differential Comparator used in place of 7A15 for calibrated offset voltages.
Probe	Fast rise 10X attenuation probe compatible with the vertical amplifier of the test oscilloscope.		Tektronix P6053B, or equivalent.
Voltmeter (Non-Loading Digital Multimeter)	Input Impedance Range	10 MΩ 0 - 500 V	Tektronix 7D13 Digital Multimeter (test oscilloscope must have readout system); or DM501 Digital Multi-Meter with TM501 or TM503 Power Module, or equivalent.

VOLTAGE MEASUREMENTS

Voltage measurements on this diagram were made under the following conditions:

Set front-panel controls to mid-range.

Set VERT MODE for CHOP.

Set TRIG SOURCE for VERT MODE.

Set storage controls for non-store operation.

No plug-in units are installed.

Voltmeter common is connected to chassis ground.

WAVEFORMS

Waveforms shown on this diagram were obtained under the following conditions:

7313 OSCILLOSCOPE UNDER TEST. Front-panel controls are set the same as for voltage measurements. A 7A15A amplifier unit and a 7B53A Time-Base unit are installed in the mainframe under test. The test oscilloscope 4 volt calibrator signal is applied to the amplifier unit. The vertical amplifier unit is set for 1 V/Division deflection centered on the crt. The 7B53A is set for a triggered sweep and 1 ms/division sweep rate.

TEST OSCILLOSCOPE. The test oscilloscope is internally triggered and is ac coupled.

Tolerances of voltages and waveforms shown are within 20%. Calibrated offset voltages are marked on waveforms at center vertical graticule line. These voltages indicate the comparison voltage of the 7A13.

http://manoman.sqhill.com

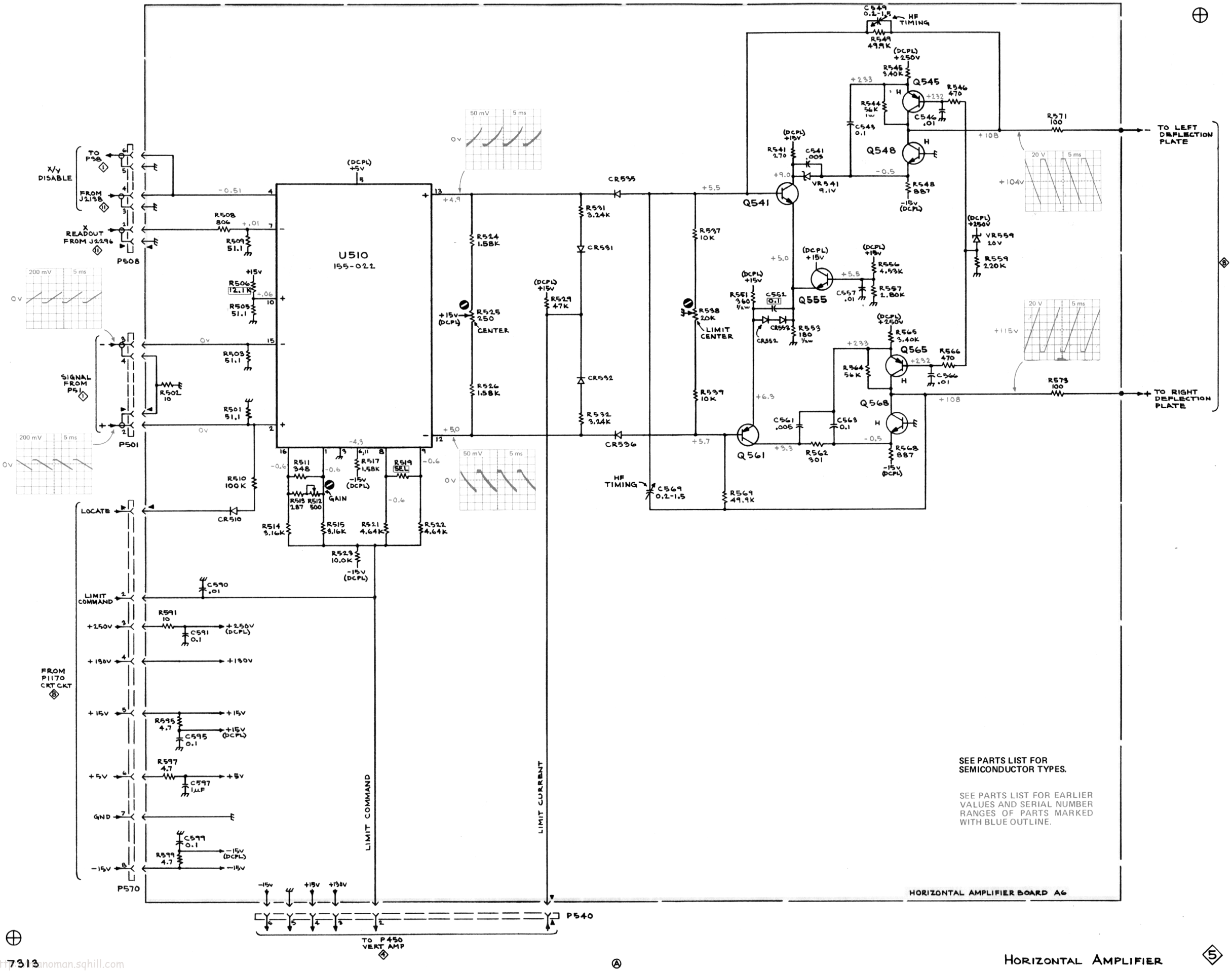
X/Y DISABLE
TO P98
FROM J2138
X READOUT FROM J2296
P508
SIGNAL FROM P51
P501
LOCATE
CR510
LIMIT COMMAND
+250V
+130V
+15V
+5V
GND
-15V
P570
FROM P1170 CRT CKT
U510
155-022
(DCPL) +5V
R508 806
R509 51.1
R506 12.1K
R505 51.1
R503 51.1
R502 10
R501 51.1
R510 100K
R511 348
R517 1.58K
R519 SEL
R513 287
R512 500
GAIN
R514 9.16K
R515 9.16K
R521 4.64K
R522 4.64K
R523 10.0K
-15V (DCPL)
R524 1.58K
R525 250
+15V (DCPL)
CENTER
R526 1.58K
R529 47K
R531 3.24K
R532 3.24K
CR535
CR531
CR532
CR536
R537 10K
R538 20K
LIMIT CENTER
R539 10K
HF TIMING
C569 0.2-1.5
R569 49.9K
C549 0.2-1.5
R549 49.9K
Q541
Q545
Q548
Q555
Q561
Q565
Q568
R541 270
C541 .005
VR541 9.1V
R545 3.40K
R546 470
R544 56K 1W
C543 0.1
C546 .01
R548 887
R551 360 1/4W
C551 0.1
CR551
CR552
R553 180 1/4W
R556 4.53K
C557 .01
R557 2.80K
R559 220K
VR559 20V
R561 .005
R562 301
C563 0.1
R564 56K
R565 3.40K
R566 470
C566 .01
R568 887
R571 100
R573 100
TO LEFT DEFLECTION PLATE
TO RIGHT DEFLECTION PLATE
C590 .01
R591 10
C591 0.1
R595 4.7
C595 0.1
R597 4.7
C597 1μF
C599 0.1
R599 4.7
LIMIT COMMAND
LIMIT CURRENT
P540
TO P450 VERT AMP
50 mV 5 ms
200 mV 5 ms
20 V 5 ms
0V
+4.9
+5.0
+5.5
+5.7
+6.3
+9.0
+5.0
+5.5
+233
+232
+108
+104v
+115v
-0.51
-4.3
-0.6
-0.5
+3.3
SEE PARTS LIST FOR SEMICONDUCTOR TYPES.
SEE PARTS LIST FOR EARLIER VALUES AND SERIAL NUMBER RANGES OF PARTS MARKED WITH BLUE OUTLINE.
HORIZONTAL AMPLIFIER BOARD A6

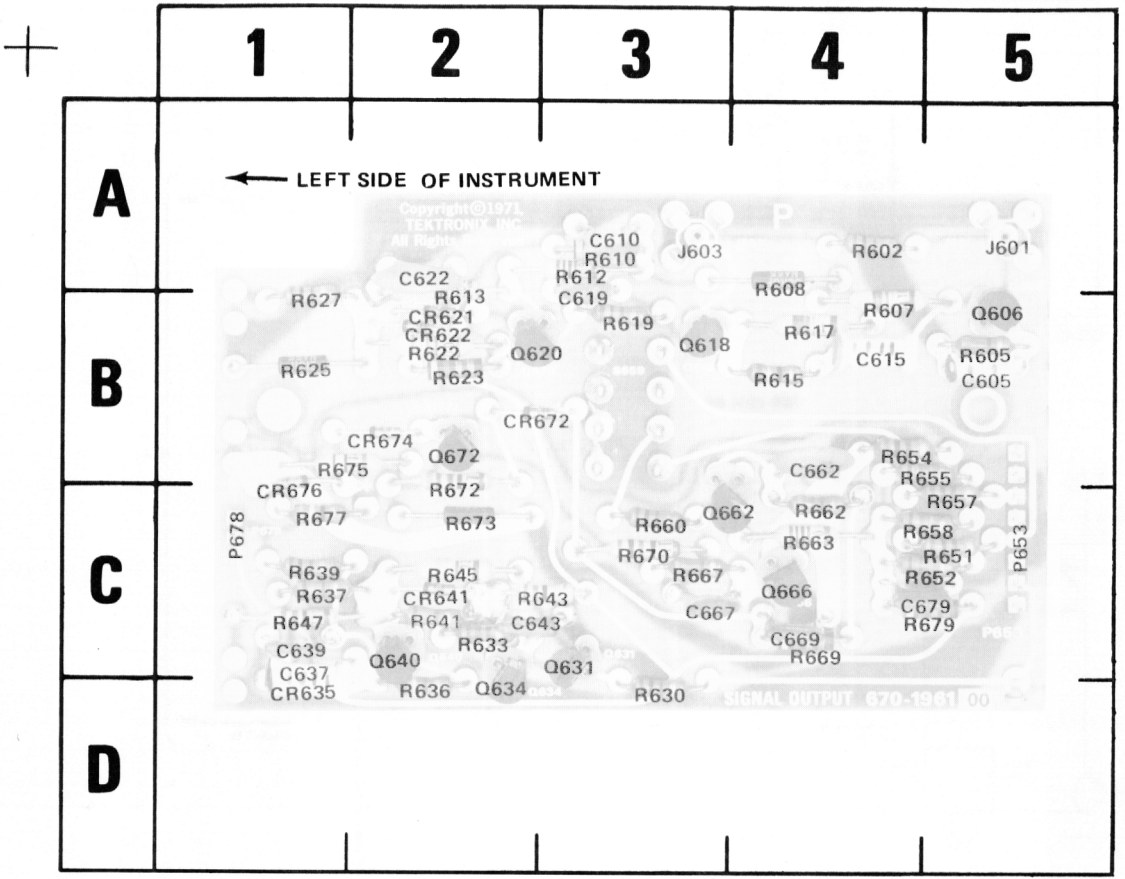

Fig. 7-9. A7—Output Signals circuit board assembly.

http://manoman.sqhill.com

CKT NO	GRID LOC	CKT NO	GRID LOC	CKT NO	GRID LOC
C605	5B	Q606	5B	R636	2D
C610	3A	Q618	3B	R637	1C
C615	4B	Q620	2B	R639	1C
C619	3B	Q631	3C	R641	2C
C622	2A	Q634	2D	R643	3C
C637	1C	Q640	2C	R645	2C
C639	1C	Q662	3C	R647	1C
C643	3C	Q666	4C	R651	5C
C662	4B	Q672	2B	R652	5C
C667	3C			R654	4B
C669	4C	R602	4A	R655	4B
C679	5C	R605	5B	R657	5C
		R607	4B	R658	5C
CR621	2B	R608	4A	R660	3C
CR622	1B	R610	3A	R662	4C
CR635	1D	R612	3A	R663	4C
CR641	2C	R613	2B	R667	3C
CR672	2B	R615	4B	R669	4C
CR674	2B	R617	4B	R670	3C
CR676	1C	R619	3B	R672	2C
		R622	2B	R673	2C
J601	5A	R623	2B	R675	1B
J603	3A	R625	1B	R677	1C
		R627	1B	R679	5C
P653	5C	R630	3D		
P678	1C	R633	2C		

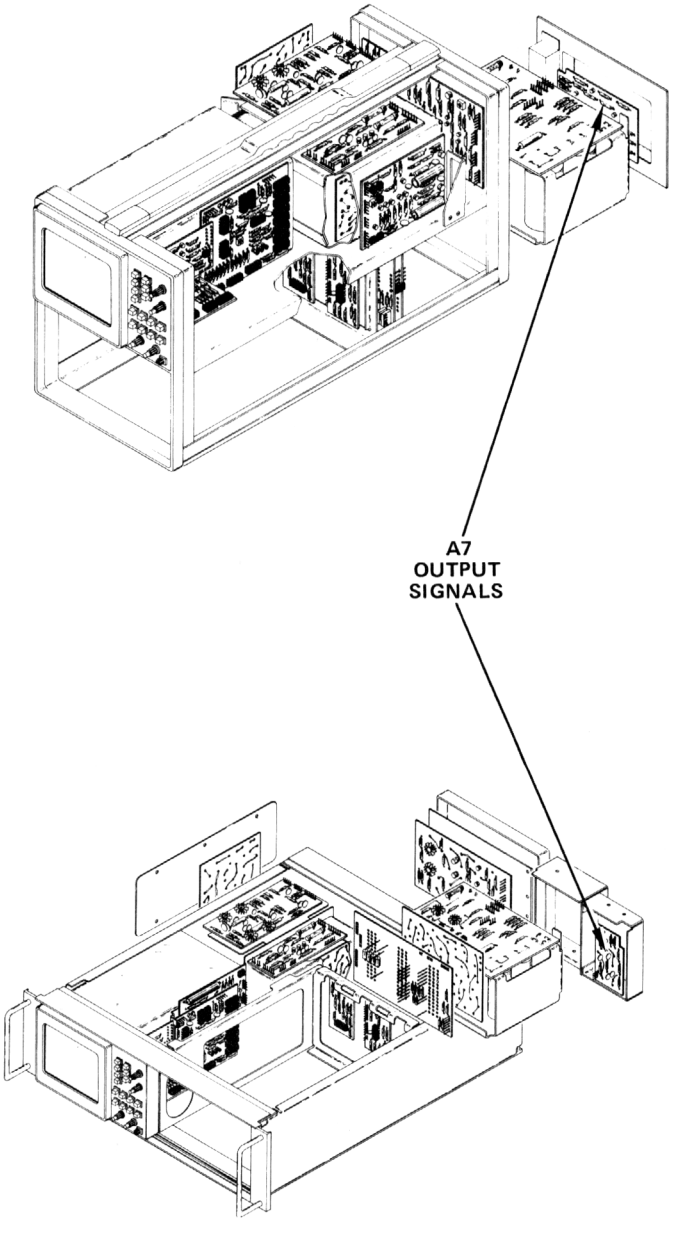

http://manoman.sqhill.com

VOLTAGE AND WAVEFORM CONDITIONS

WARNING

Dangerous potentials exist at several points throughout this instrument. When the instrument is operated with the covers removed, do not touch connections or components. Some transistors have voltages present on their cases. Disconnect the power source before cleaning the instrument or replacing parts.

The voltages and waveforms shown on this diagram were obtained by using the recommended test equipment and test set-ups listed below.

RECOMMENDED TEST EQUIPMENT

Item	Specifications		Recommended Type
Oscilloscope	Frequency Response Deflection Factor Input Impedance Sweep Rate	Dc to 65 MHz 5 mV to 5 V/div 10 MΩ, 20 pF 500 ns	Tektronix 7603 or 7313 equipped with 7A15A Amplifier and 7B-series time-base unit, or equivalent. (7A13 Differential Comparator used in place of 7A15A for calibrated offset voltages).
Probe	Fast rise 10X attenuation probe compatible with the vertical amplifier of the test oscilloscope.		Tektronix P6053B, or equivalent.
Voltmeter (Non-Loading Digital Multimeter)	Input Impedance Range	10 MΩ 0 - 500 V	Tektronix 7D13 Digital Multimeter (test oscilloscope must have readout system); or DM501 Digital Multimeter with TM501 or TM503 Power Module, or equivalent.

NOTE

Disconnect power cord from line. Remove power cord rap feet screws. The rear power-unit panel can now be pulled out to expose signals out board. Cables remain connected.

VOLTAGE MEASUREMENTS

Voltage measurements on this diagram were made under the following conditions:

Set front-panel controls (knob type) to mid-range.

Set VERT MODE for CHOP.

Set TRIG SOURCE for VERT MODE.

Set storage controls for non-store operation.

Set the rear-panel Gate Selector switch to MAIN.

No plug-in units are installed.

Voltmeter common is connected to chassis ground.

WAVEFORMS

Waveforms shown on this diagram were obtained under the following conditions:

7313 OSCILLOSCOPE UNDER TEST. Front-panel controls are set the same as for voltage measurements. A 7A15A amplifier unit and a 7B53A Time-Base unit are installed in the mainframe under test. The test oscilloscope 4 volt calibrator signal is applied to the amplifier unit. The amplifier unit is set for 1 V/division deflection centered on the crt. The 7B53A is set for a triggered sweep and 1 ms/Division sweep rate.

TEST OSCILLOSCOPE. The test oscilloscope is internally triggered and ac coupled.

Tolerances of voltages and waveforms shown are within 20%. Calibrated offset voltages are marked on waveforms at center vertical graticule lines. These voltages indicate the comparison voltage of the 7A13.

http://manoman.sqhill.com

VERTICAL SIGNAL FROM TRIGGER SELECTOR P339 ◇3

J601 J603 R602 100

R605 560 C605 100 Q606 R607 15.8 C615 27 R615 24 R617 15.8

+15V R610 4.7 R608 82.5 C610 .001

R612 500 R619 100 C619 .001 Q618 Q620 R613 1K

R625 2.1k R627 100 CR621 CR622 R622 1.43k R623 4.7 C622 .01 -15V

J629 VERT SIG OUT

SWEEP FROM M.I. P53-1,2 ◇1 P653 TP630

R630 100 Q631 Q634 R645 4.99k +15V R639 100 C639 0.1 R636 240 Q640 R633 2.2k CR635 C637 22 R637 1.5k R641 2.7k CR641 C643 0.1 R643 22 -15V

R647 931 J649 + SAWTOOTH OUT

S659 GATE (SELECTOR)

SWEEP GATE FROM M.I. P53-3,4 ◇1 R651 200 R652 12k -15V (DCPL)

AUX SWEEP SWEEP GATE FROM M.I. P53-7,8 ◇1 R654 200 R655 12k -15V (DCPL)

DELAY GATE FROM M.I. P53-5,6 ◇1 R657 200 R658 12k -15V (DCPL)

SWP GATE AUX GATE DLY GATE

R660 100 Q662 R662 820 C662 .022 R663 1k -15V (DCPL)

Q666 R667 560 C667 .001

R669 4.7 R670 301 C669 0.1 CR672 R672 732 R673 2.21k Q672

CR674 CR676 R675 909 R677 39 J679 + GATE OUT

+15V -15V (DCPL) -15V R679 4.7 C679 0.1

P678 FROM P998 ◇9

OUTPUT SIGNALS BOARD A7

SEE PARTS LIST FOR EARLIER VALUES AND SERIAL NUMBER RANGES OF PARTS MARKED WITH BLUE OUTLINE.

SEE PARTS LIST FOR SEMICONDUCTOR TYPES.

http://manoman.sqhill.com

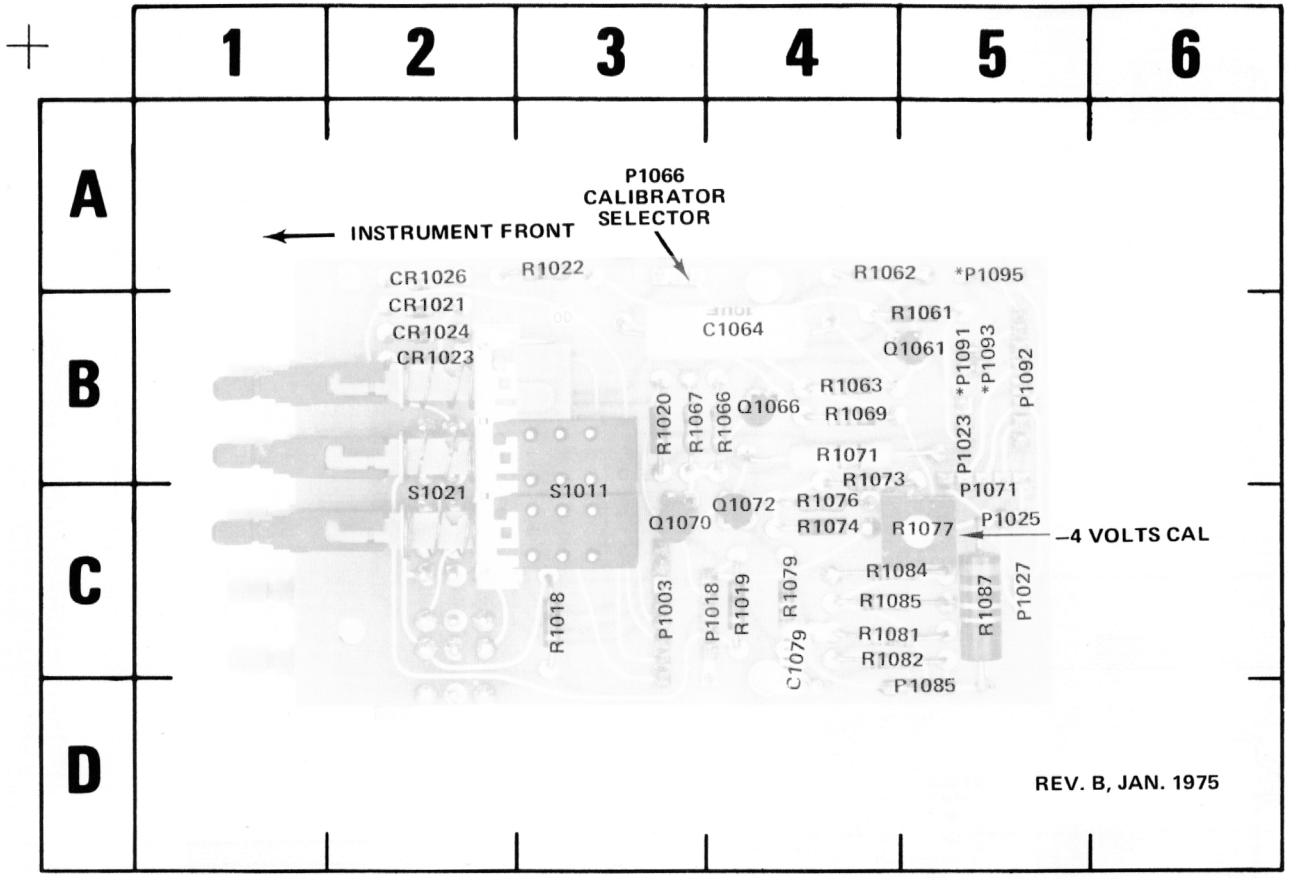

*See Parts List for serial number ranges.

Fig. 7-10. A8—Calibrator circuit board assembly.

http://manuals.hp

CKT NO	GRID LOC	CKT NO	GRID LOC
C1064	4B	R1018	3C
C1079	4C	R1019	4C
		R1020	3B
CR1021	2B	R1022	3A
CR1023	2B	R1061	5B
CR1024	2B	R1062	4A
CR1026	2A	R1063	4B
		R1066	4B
P1003	3C	R1067	3B
P1018	4C	R1069	4B
P1025	5C	R1071	4B
P1027	5C	R1073	4B
P1066	3A	R1074	4C
P1085	5D	R1076	4C
P1091	5B	R1077	5C
P1092	5B	R1079	4C
P1093	5B	R1081	5C
P1095	5A	R1082	5C
		R1084	5C
Q1061	5B	R1085	5C
Q1066	4B	R1087	5C
Q1070	3C		
Q1072	4C	S1011	3C
		S1021	2C

REV. B, JAN. 1975

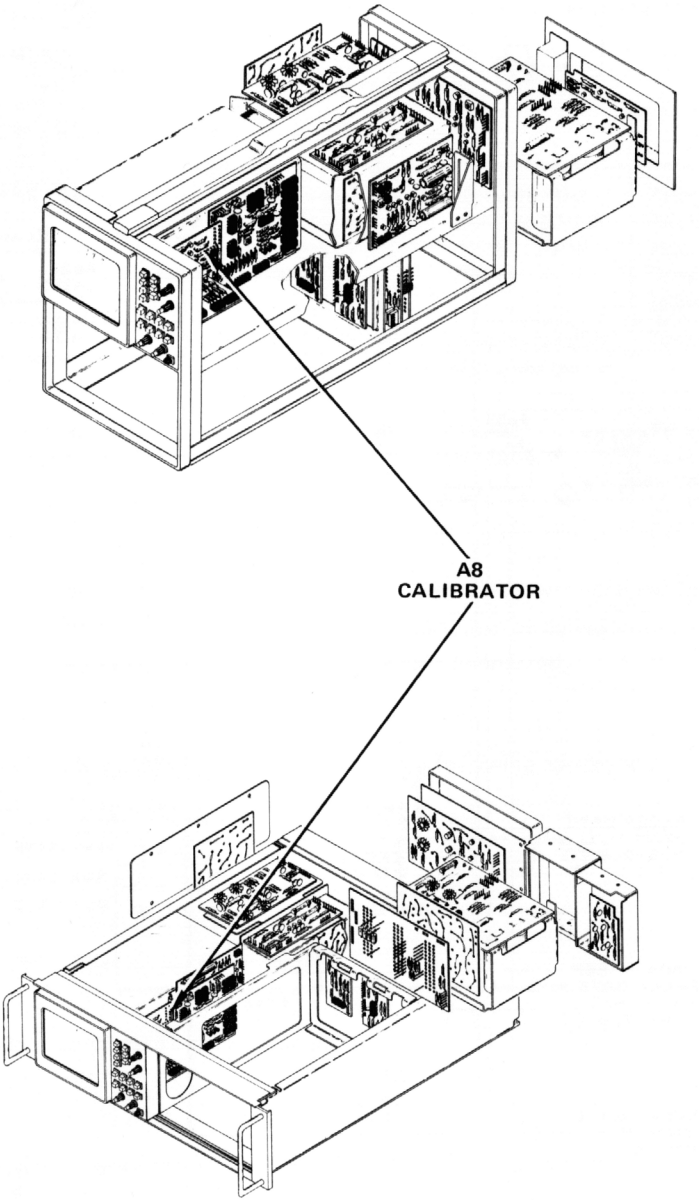

http://manoman.sqhill.com

VOLTAGE AND WAVEFORM CONDITIONS

WARNING

Dangerous potentials exist at several points throughout this instrument. When the instrument is operated with the covers removed, do not touch connections or components. Some transistors have voltages present on their cases. Disconnect the power source before cleaning the instrument or replacing parts.

The voltages and waveforms shown on this diagram were obtained by using the recommended test equipment and test set-ups listed below.

RECOMMENDED TEST EQUIPMENT

Item	Specifications		Recommended Type
Oscilloscope	Frequency Response Deflection Factor Input Impedance Sweep Rate	Dc to 65 MHz 5 mV to 5 V/div 10 MΩ, 20 pF 500 ns	Tektronix 7603 or 7313 equipped with 7A15A Amplifier and 7B-series time-base unit, or equivalent. (7A13 Differential Comparator used in place of 7A15 for calibrated offset voltages.
Probe	Fast rise 10X attenuation probe compatible with the vertical amplifier of the test oscilloscope.		Tektronix P6053B, or equivalent.
Voltmeter (Non-Loading Digital Multimeter)	Input Impedance Range	10 MΩ 0 - 500 V	Tektronix 7D13 Digital Multimeter (test oscilloscope must have readout system); or DM501 Digital Multi-Meter with TM501 or TM503 Power Module, or equivalent.

VOLTAGE MEASUREMENTS

Voltage measurements on this diagram were made under the following conditions:

Set front-panel controls to mid-range.

Set VERT MODE for CHOP.

Set TRIG SOURCE for VERT MODE.

Set storage controls for non-store operation.

No plug-in units are installed.

Voltmeter common is connected to chassis ground.

WAVEFORMS

Waveforms shown on this diagram were obtained under the following conditions:

7313 OSCILLOSCOPE UNDER TEST. Front-panel controls are set the same as for voltage measurements. A 7A15A amplifier unit and a 7B53A Time-Base unit are installed in the mainframe under test. The test oscilloscope 4 volt calibrator signal is applied to the amplifier unit. The vertical amplifier unit is set for 1 V/Division deflection centered on the crt. The 7B53A is set for a triggered sweep and 1 ms/division sweep rate.

TEST OSCILLOSCOPE. The test oscilloscope is internally triggered and is ac coupled.

Tolerances of voltages and waveforms shown are within 20%. Calibrated offset voltages are marked on waveforms at center vertical graticule line. These voltages indicate the comparison voltage of the 7A13.

http://manoman.sghill.com

CAMERA CONNECTOR LOCATED ON CRT BEZEL

P1041

P1023

+15V

P1003

SINGLE SWP RESET

ADD & CHOP

ALT & RIGHT

VERT MODE

TRIG SOURCE S1011

LEFT

VERT MODE

RIGHT

+5V (DCPL)

RIGHT VERTICAL

TO P2118 READOUT 11

VERT MODE LOCKOUT

HORIZ MODE LOCKOUT

R0 INTEN

R L

B A

P1018

(READOUT OFF S102)

R1028 5k

CW

-15V

READOUT (INTENSITY)

R1019 1k

R1018 1k

+5V (DCPL)

LEFT

ALT

ADD

CHOP

RIGHT

VERT MODE S1021

+5V (DCPL)

+5V (DCPL)

+5V (DCPL)

+5V (DCPL)

+5V (DCPL)

CR1021

CR1023

CR1024

ALT

ADD

CHOP

RIGHT

TO P13 1

R1022 30k

CR1026

-15V

+6.7V

2 V

200 µs

+50V

+15V

R1066 18k

Q1070

R1071 4.99k

+15V

R1073 2.2k

R1076 7.5k

+15V

4VOLTS

R1077 5k

-15V

+5.2

+4.5

Q1072

R1074 1k

Q1066

Q1061

R1061 22k

+1.4

R1062 3.6k

-0.23

R1063 43k

C1064 0.1

-15V

+1.8

R1069 43k

-15V

R1067 51k

+2.01

R1079 20k

C1079 200

R1081 455

R1082 50.8

R1084 5k

R1085 50.5

P1085

4V

0.4V

40mV

GND

CALIBRATOR (≈ 1 kHz)

1 V

200 µs

+2V

R1087 0.51

P1091

TO UPPER GRATICULE LIGHTS 9

P1093

TO LOWER GRATICULE LIGHTS 9

+5V

-15V

TO GRATICULE ILLUM 9

P1095

P1027

TO AUTO ERASE P1345 10

+5V

P1025

SWP (+) GATE FROM AUTO ERASE P1305 10

+15V +5V -15V

P1071

CALIBRATOR BOARD A6

1 kHz

DC

P1066

SWP (+) GATE

+15V +5V -15V GND

TO P2171 READOUT 11

P1095

LIMIT COMMAND

S1030 BEAM FINDER

-15V

+5V (DCPL)

R1020 15

+50V +15V +5V -15V

P1092

6 1 2 3 4 5 7 8

* SEE 9 8 5 FOR CONNECTOR DETAILS

TO P450-2 4

FROM P962 9

SEE PARTS LIST FOR SEMICONDUCTOR TYPES.

CALIBRATOR & FRONT PANEL SWITCHING 7

kf 2-72

7313

A

http://manoman.sqhill.com

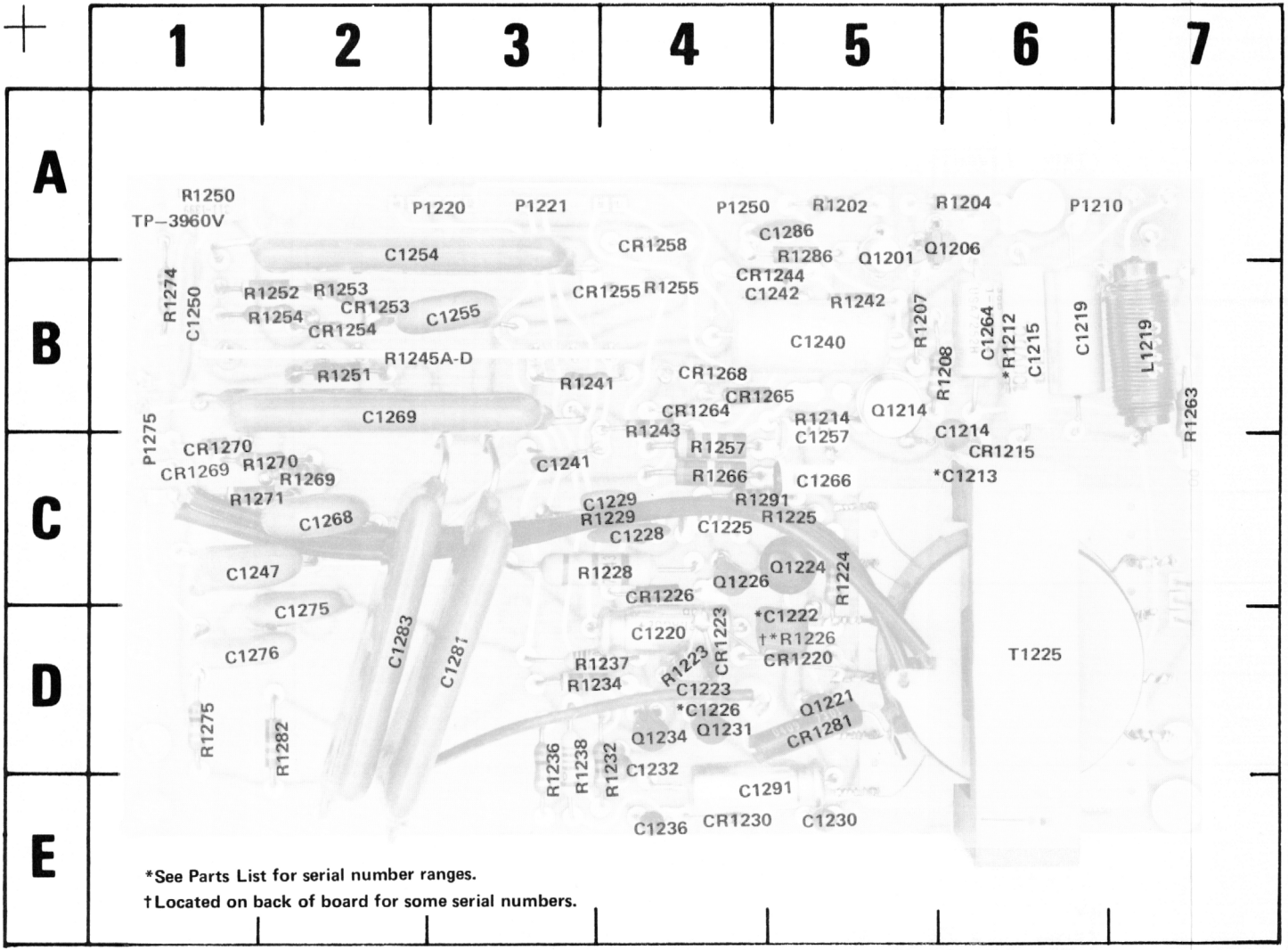

*See Parts List for serial number ranges.

†Located on back of board for some serial numbers.

Fig. 7-11B A9—High Voltage circuit board assembly (below SN B120000.)

http://manoman.sghill.com

CKT NO	GRID LOC	CKT NO	GRID LOC	CKT NO	GRID LOC	CKT NO	GRID LOC	CKT NO	GRID LOC
C1214	6B	C1266	5C	CR1265	4B	R1202	5A	R1252	2B
C1215	6B	C1268	2C	CR1268	4B	R1204	6A	R1253	2B
C1219	6B	C1269	2B	CR1270	1C	R1207	5B	R1254	2B
C1220	4D	C1275	2D	CR1281	5D	R1208	6B	R1255	4B
C1223	4D	C1276	1D			R1214	5B	R1257	4C
C1225	4C	C1281	3D	L1219	7B	R1223	4D	R1263	7B
C1228	4C	C1283	2D			R1224	5C	R1266	4C
C1229	4C	C1286	5A	P1220	3A	R1225	5C	R1270	2C
C1230	5E	C1291	4E	P1221	3A	R1228	4C	R1269	2C
C1232	4D			P1250	4A	R1229	4C	R1271	2C
C1234	3D	CR1215	6C	P1275	1C	R1232	4D	R1274	1B
C1236	4E	CR1220	5D			R1236	3D	R1275	1D
C1240	5B	CR1223	4D	Q1201	5B	R1237	4D	R1282	2D
C1241	3C	CR1230	4E	Q1206	6A	R1238	3D	R1286	5B
C1242	5B	CR1226	4C	Q1221	5D	R1241	3B	R1291	4C
C1247	1C	CR1244	5B	Q1222	5D	R1242	5B		
C1250	1B	CR1253	2B	Q1214	5B	R1243	4C	T1225	6D
C1254	2A	CR1254	2B	Q1224	5C	R1245	3B		
C1255	3B	CR1255	4B	C1226	4C	A-D		TP-3960V	1A
C1257	5C	CR1258	4A	Q1231	4D	R1250	1A		
C1264	6B	CR1264	4B	Q1234	4D	R1251	2B		

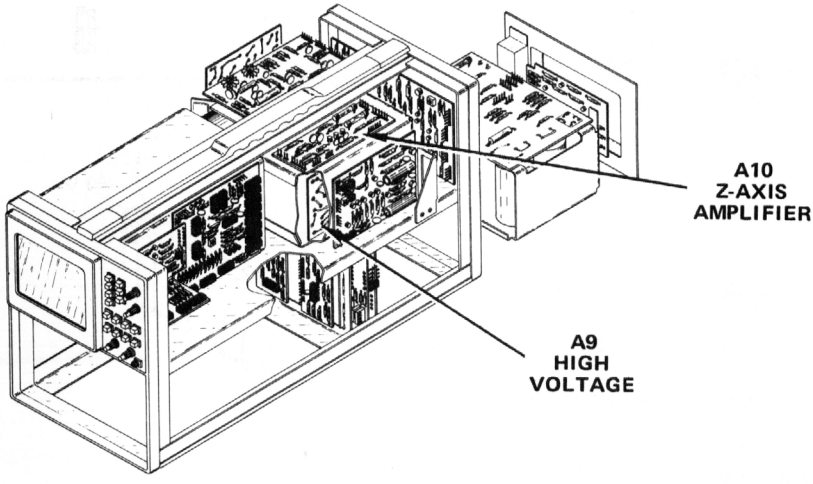

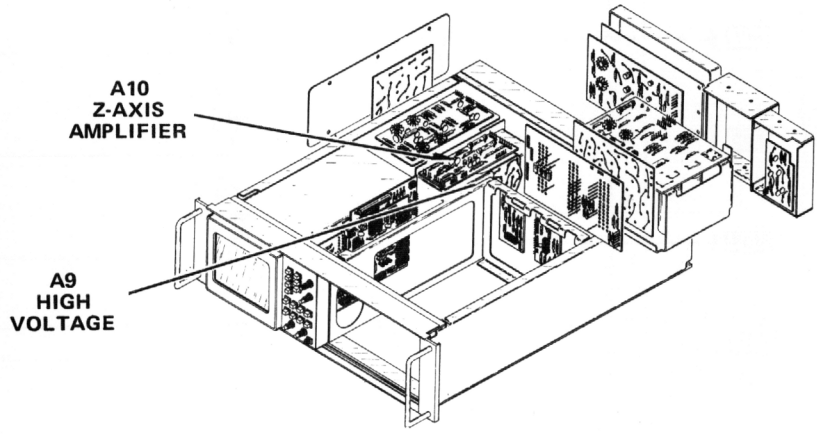

http://manoman.sqhill.com

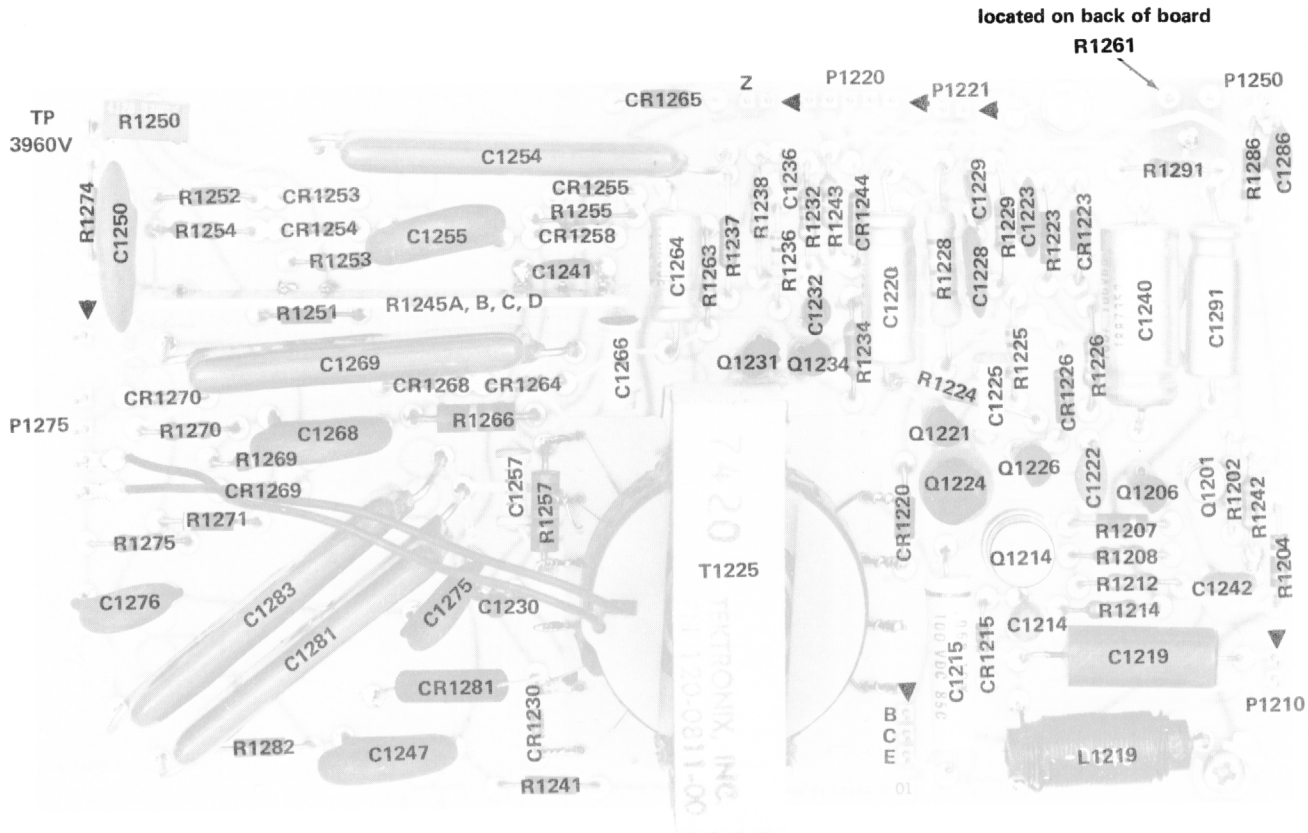

Fig. 7-11A A9—High Voltage circuit board assembly. (SN B120000 & up.)

http://manoman.sqhill.com

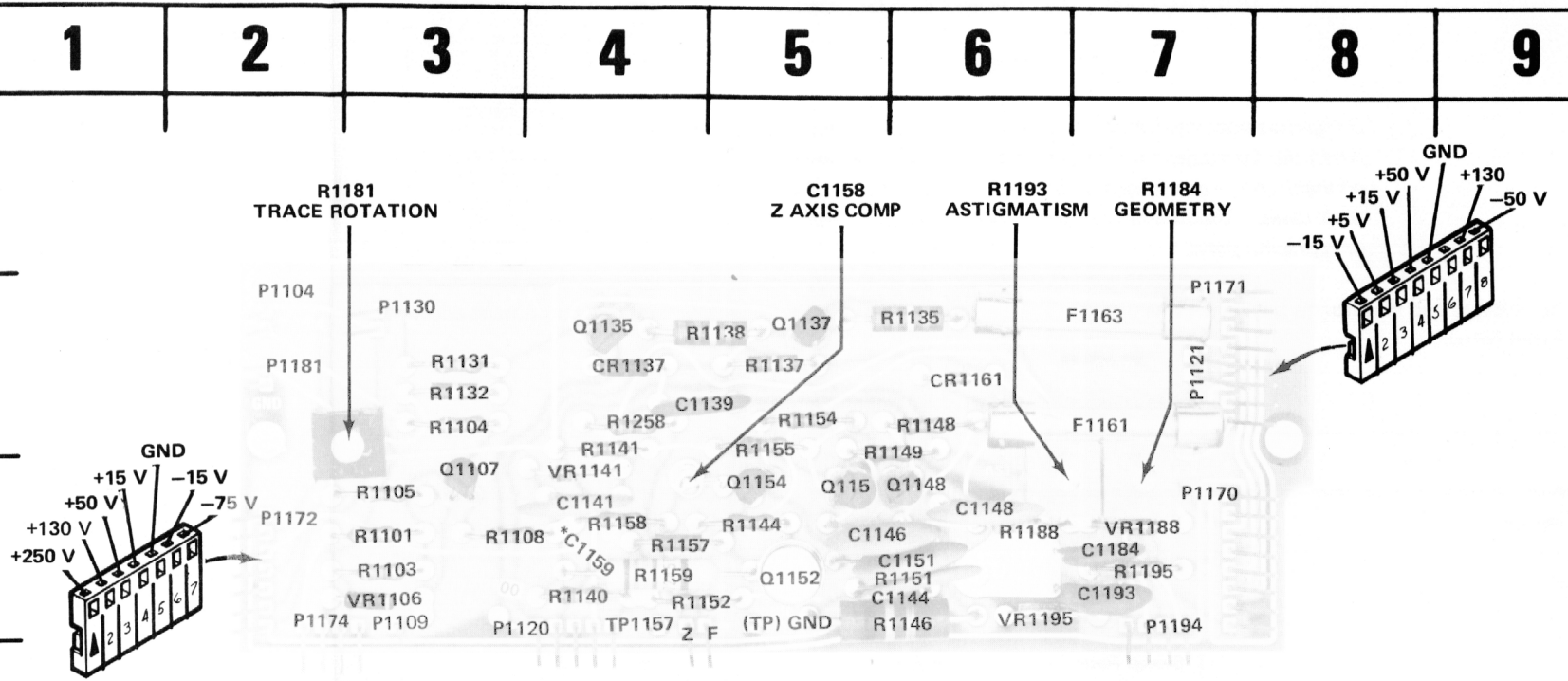

*See Parts List for serial number ranges.

Fig. 7-12. A10—Z-Axis circuit board assembly.

http://manomanuals.com

CKT NO	GRID LOC	CKT NO	GRID LOC	CKT NO	GRID LOC
C1139	5B	P1181	2B	R1148	6B
C1141	4C	P1194	7C	R1149	6B
C1144	6C			R1151	6C
C1146	5C	Q1107	3C	R1152	4C
C1148	6C	Q1135	4B	R1154	5B
C1151	6C	Q1137	5B	R1155	5B
C1158	5C	Q1148	6C	R1157	4C
C1159	4C	Q1152	5C	R1158	4C
C1184	7C	Q1154	5C	R1159	4C
C1193	7C			R1181	3B
		R1101	3C	R1184	7C
CR1137	4B	R1103	3C	R1188	6C
CR1161	6B	R1104	3B	R1193	6C
		R1105	3C	R1195	7C
F1161	7B	R1108	3C	R1258	4B
F1163	7B	R1131	3B		
P1104	2B	R1132	3B	TP1157	4C
P1109	3D	R1135	6B		
P1120	4D	R1137	5B	VR1106	3C
P1121	7B	R1138	5B	VR1141	4C
P1130	3B	R1140	4C	VR1188	7C
P1170	7C	R1141	4B	VR1195	6C
P1171	7B	R1144	5C		
P1172	2C	R1146	6C		
P1174	2C				

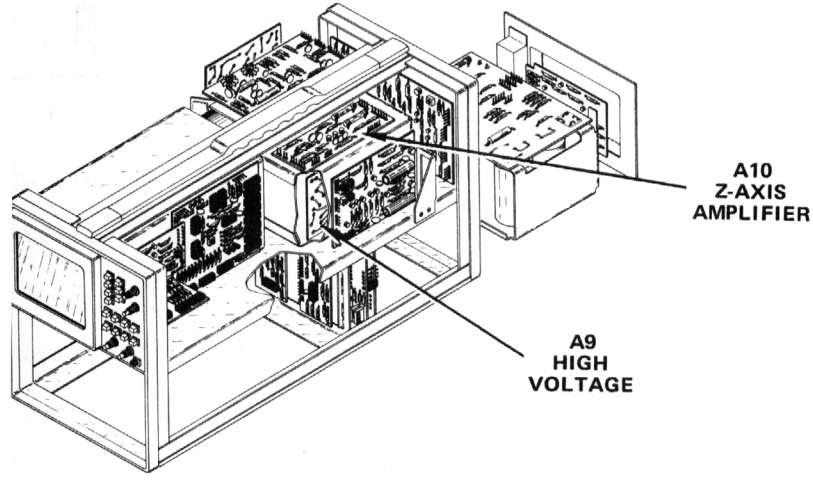

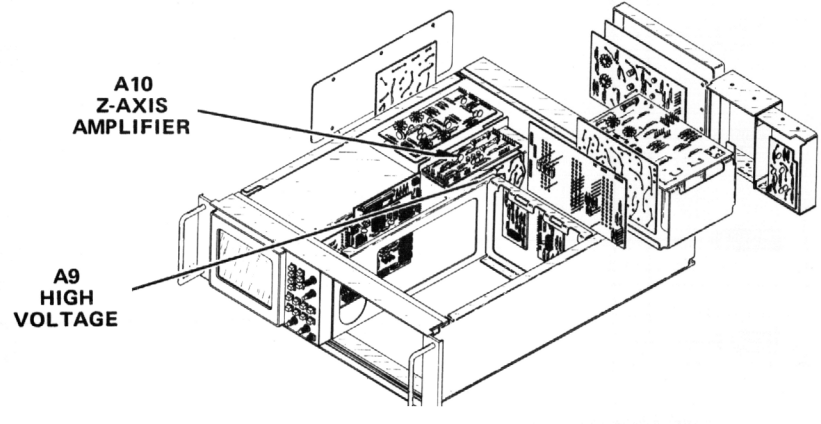

http://manoman.sqhill.com

VOLTAGE AND WAVEFORM CONDITIONS

WARNING

Dangerous potentials exist at several points throughout this instrument. When the instrument is operated with the covers removed, do not touch exposed connections or components. Some transistors have voltages present on their cases. Disconnect the power source before cleaning the instrument or replacing parts.

The voltages and waveforms shown on this diagram were obtained by using the recommended test equipment and test set-ups listed below.

RECOMMENDED TEST EQUIPMENT

Item	Specifications		Recommended Type
Oscilloscope	Frequency Response Deflection Factor Input Impedance Sweep Rate	Dc to 65 MHz 5 mV to 5 V/div 10 MΩ, 20 pF 500 ns	Tektronix 7603 or 7313 equipped with 7A15A Amplifier and 7B-series time-base unit, or equivalent. (7A13 Differential Comparator used in place of 7A15A for calibrated offset voltages.
Probe	Fast rise 10X attenuation probe compatible with the vertical amplifier of the test oscilloscope.		Tektronix P6053B, or equivalent.
Voltmeter (Non-Loading Digital Multimeter)	Input Impedance Range	10 MΩ 0 - 500 V	Tektronix 7D13 Digital Multimeter (test oscilloscope must have readout system); or DM501 Digital Multi-Meter with TM 501 or TM503 Power Module, or equivalent.

VOLTAGE MEASUREMENTS

Voltage measurements on this diagram were made under the following conditions:

Set front-panel controls to mid-range.

Set VERT MODE for CHOP.

Set TRIG SOURCE for VERT MODE.

Set storage controls for non-store operation.

No plug-in units are installed.

Voltmeter common is connected to chassis ground.

WAVEFORMS

Waveforms shown on this diagram were obtained under the following conditions:

7313 OSCILLOSCOPE UNDER TEST. Front-panel controls are set the same as for voltage measurements. A 7A15A amplifier unit and a 7B53A Time-Base unit are installed in the mainframe under test. The test oscilloscope 4 volt calibrator signal is applied to the amplifier unit. The amplifier unit is set for 1 V /division deflection centered on the crt. The 7B53A is set for a triggered sweep and 1 ms/division sweep rate.

TEST OSCILLOSCOPE. The test oscilloscope is internally triggered and ac coupled.

Tolerances of voltages and waveforms shown are within 20%. Calibrated offset voltages are marked on waveforms at center vertical graticule line. These voltages indicate the comparison voltage of the 7A13.

http://manoman.sqhill.com

*THICK FILM RESISTOR

SEE PARTS LIST FOR EARLIER VALUES AND SERIAL NUMBER RANGES OF PARTS MARKED WITH BLUE OUTLINE.

SEE PARTS LIST FOR SEMICONDUCTOR TYPES.

7313

REV.C, NOV. 1975

CRT CIRCUIT (8)

http://manoman.sqhill.com

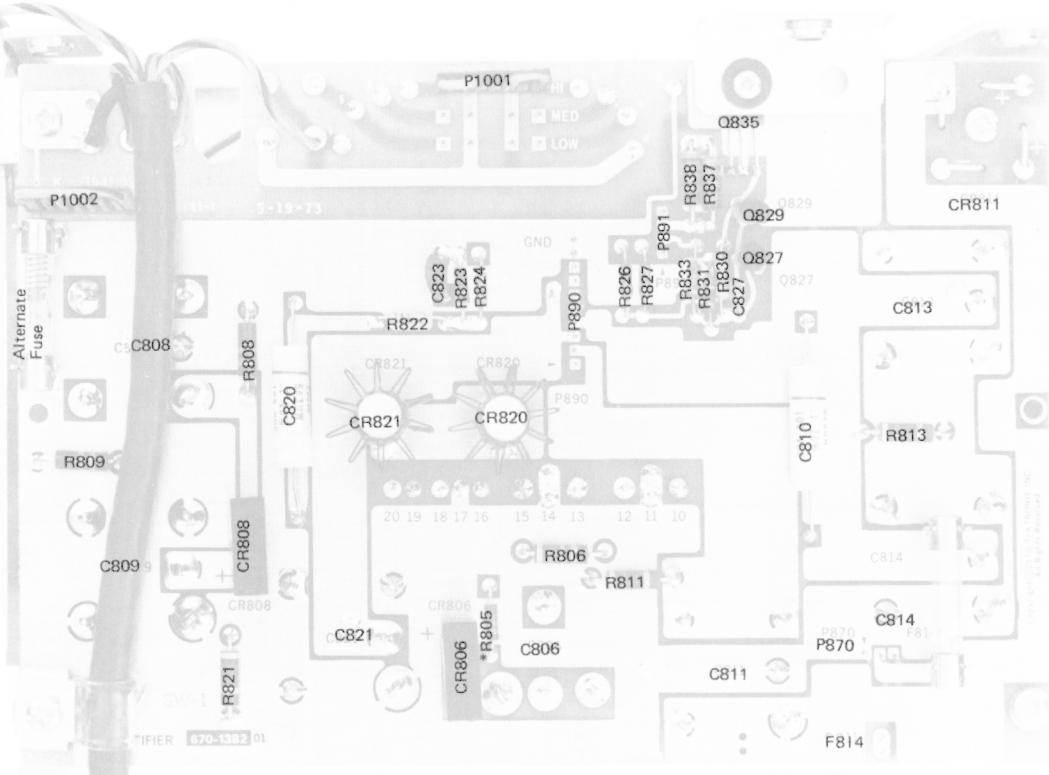

Fig. 7-13B. A11—Rectifier circuit board assembly (B060651 and up).

http://manoman.sqhill.com

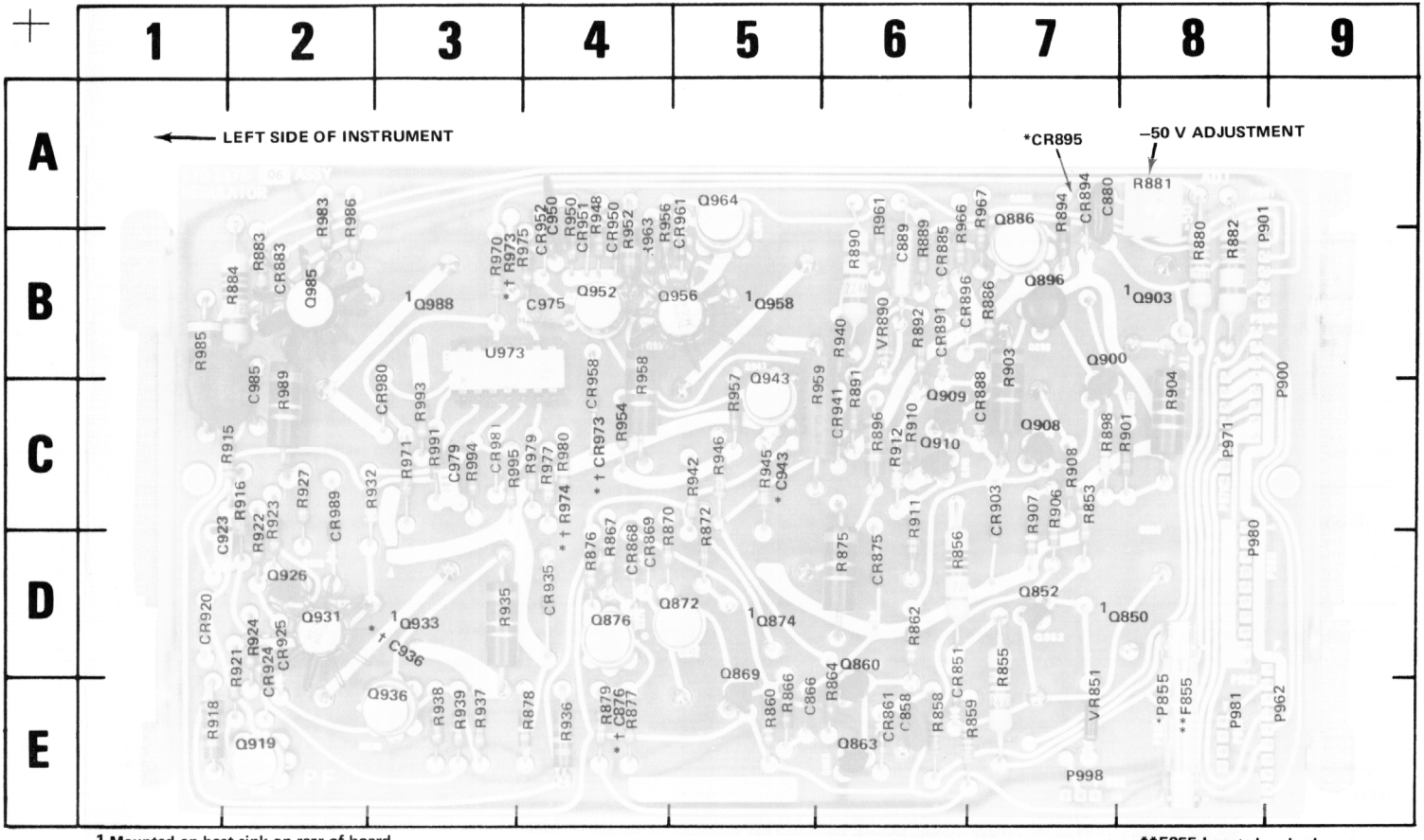

1 Mounted on heat sink on rear of board.
† Located on back of board some serial numbers.
* See Parts List for serial number ranges.

Fig. 7-14. A12—Low-Voltage Regulator circuit board assembly.

**F855 Located on back panel at SN B10000 & up.

http://manuals

CKT NO	GRID LOC
C858	6E
C866	5E
C880	7A
C889	6B
C923	2C
C929	3C
C950	4A
C975	4B
C985	2C
F855	8E
CR780	3C
CR851	6D
CR868	4D
CR869	4D
CR875	6D
CR881	6E
CR883	2B
CR885	6B
CR888	7C
CR891	6B
CR895	7A
CR894	7A
CR896	7B
CR903	7C
CR920	1D
CR924	2D
CR925	2D
CR935	4E
CR941	
CR950	4A
CR951	4A
CR952	4A
CR958	4C
CR961	5A
CR981	3C
CR989	2C
P855	8E
Q852	7D
Q860	6D
Q863	6E
Q869	5D
Q872	5D
Q876	4D
Q886	7A
Q896	7B
Q900	7B
Q908	7C
Q909	6C
Q910	6C
Q919	2E
Q926	2D
Q931	2D
Q936	3E
Q943	5C
Q956	5B
Q964	5A
R853	7C
R855	7D
R856	6D
R858	6E
R859	7E
R860	5E
R862	6D
R866	5E
R867	4D
R870	4D
R872	5C
R875	6D
R877	4E
R878	4E
R879	4E
R880	8B
R881	8B
R882	8B
R884	2B
R883	2B
R888	7B
R889	6B
R890	6B
R891	6C
R892	6B
R894	7A
R896	6C
R898	7C
R901	8C
R903	7B
R904	8C
R906	7C
R907	7C
R908	7C
R910	6C
R911	6D
R912	6C
R915	2C
R916	2C
R918	1E
R921	2D
R922	2D
R923	2C
R924	2D
R927	2C
R932	3C
R935	3D
R936	4E
R937	3E
R938	2E
R939	3E
R940	6B
R945	5C
R946	5C
R947	5C
R948	4A
R950	4A
R951	4C
R952	4A
R956	4A
R957	5C
R958	4C
R959	5C
R963	4A
R966	6A
R967	7A
R970	3B
R971	3C
R975	4B
R977	4C
R979	4C
R980	4C
R981	6A
R983	2A
R985	1B
R986	2A
R989	2C
R991	3C
R993	3C
R994	3C
R995	3C
VR851	7E
VR896	6B
U973	3B

http://manoman.sghill.com

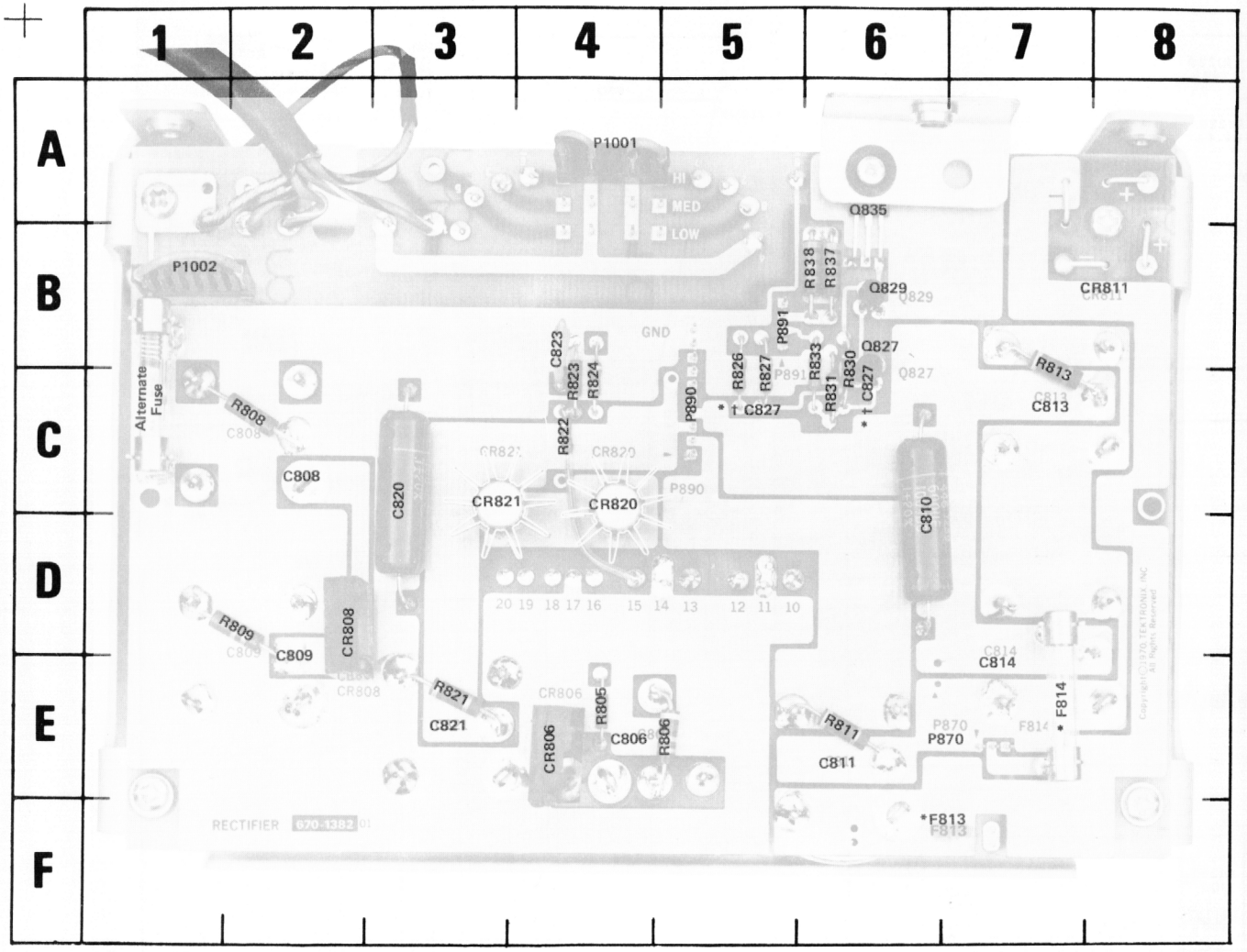

† Relocated for some serial numbers.
* See Parts List for serial number ranges.

Fig. 7-13A. A11—Rectifier circuit board assembly (B010100 to B060650).

CKT NO	GRID LOC
C806	4E
C808	2C
C809	2D
C810	6D
C811	6E
C813	7C
C814	7E
C820	3C
C821	3E
C823	4B
C827	6C
CR806	4E
CR808	2D
CR811	8B
CR820	4C
CR821	3C
F814	7E
P870	6E
P890	5C
P891	5B
P1001	4A
P1002	1B
Q827	6B
Q829	6B
Q835	6A
R805	4E
R806	5E
R808	2C
R809	2D
R811	6E
R813	7C
R821	3E
R822	4C
R823	4C
R824	4C
R826	5C
R827	5C
R830	6C
R831	6C
R833	6C
R837	6B
R838	6B

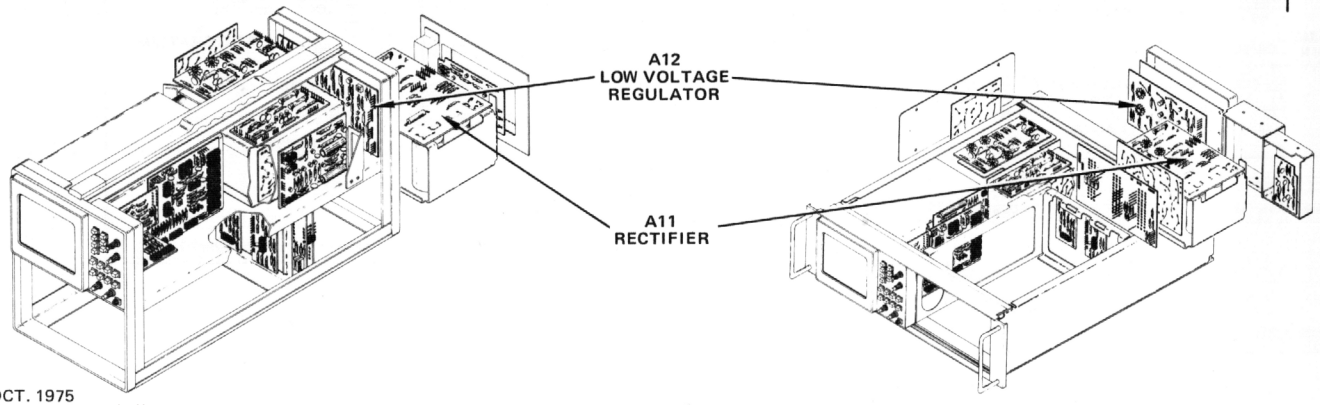

http://manoman.sqhill.com

VOLTAGES AND WAVEFORMS

WARNING

Dangerous potentials exist at several points throughout this instrument. When the instrument is operated with the covers removed, do not touch exposed connections or components. Some transistors have voltages present on their cases. Disconnect the power source before cleaning the instrument or replacing parts.

The voltages and waveforms shown on this diagram were obtained by using the recommended test equipment and test set-ups listed below.

RECOMMENDED TEST EQUIPMENT

Item	Specifications		Recommended Type
Oscilloscope	Frequency Response Deflection Factor Input Impedance Sweep Rate	Dc to 65 MHz 5 mV to 5 V/div 10 MΩ, 20 pF 500 ns	Tektronix 7603 or 7313 equipped with 7A22 Amplifier and 7B-series time-base unit, or equivalent.
Probe	Fast rise 10X attenuation probe compatible with the vertical amplifier of the test oscilloscope.		Tektronix P6053B, or equivalent.
Voltmeter (Non-Loading Digital Multimeter)	Input Impedance Range	10 MΩ 0 - 500 V	Tektronix 7D13 Digital Multimeter (test oscilloscope must have readout system; or DM501 Digital Multimeter with TM501 or TM503 Power Module, or equivalent.

NOTE

Remove power unit and regulator board to expose lv power supply circuitry (refer to the Maintenance section for instruction for removal of power unit and regulator board).

VOLTAGE MEASUREMENTS

Voltage measurements on this diagram were made under the following conditions:

Set front-panel controls (except READOUT) to mid-range.
Set READOUT to off.
Set VERT MODE for CHOP.
Set TRIG SOURCE for VERT MODE.
Set storage controls for non-store operation.
No plug-in units are installed.
Voltmeter common is connected to chassis ground.

WAVEFORMS

Waveforms shown on this diagram were obtained under the following conditions:

7313 OSCILLOSCOPE UNDER TEST. Front-panel controls are set the same as for voltage measurements. A 7A15A amplifier unit and a 7B53A Time-Base unit are installed in the mainframe under test. The test oscilloscope 4 volts calibrator signal is applied to the amplifier unit. The amplifier unit is set for 1 V/division deflection centered on the crt. The 7B53A is set for an internally triggered sweep and 1 ms/division sweep rate.

TEST OSCILLOSCOPE. The test oscilloscope is ac coupled and set for Line Trigger. A 7A22 amplifier unit is installed and controls set as follows:

HF -3 dB POINT	30 KHz
LF -3 dB POINT	DC
+ INPUT	AC
– INPUT	GND

Tolerances of voltages and waveforms shown are within 20%.

http://manoman.sqhill.com

LV POWER SUPPLY

REV. B, AUG 1974

LOW VOLTAGE REGULATOR BOARD A12

RECTIFIER BOARD A11

GRATICULE ILLUM

GRATICULE LIGHTS BOARD A13

PARTIAL CALIBRATOR BOARD

PARTIAL REGULATOR BOARD

LINE TRIGGER TO P90-1

SEE PARTS LIST FOR SEMICONDUCTOR TYPES.

SEE PARTS LIST FOR EARLIER VALUES AND SERIAL NUMBER RANGES OF PARTS MARKED WITH BLUE OUTLINE.

UNREGULATED +15V & -15V TO P1210

LIMIT COMMAND

TO P1092 CAL BRD

TO P678

TO P1171 Z AXIS BRD

REAR PANEL GROUNDED AT PLUG-IN HOUSING

VOLTAGE SELECTOR JUMPER FOR 220 V OPERATION

* CA 3046

7313

http://manoman.sqhill.com

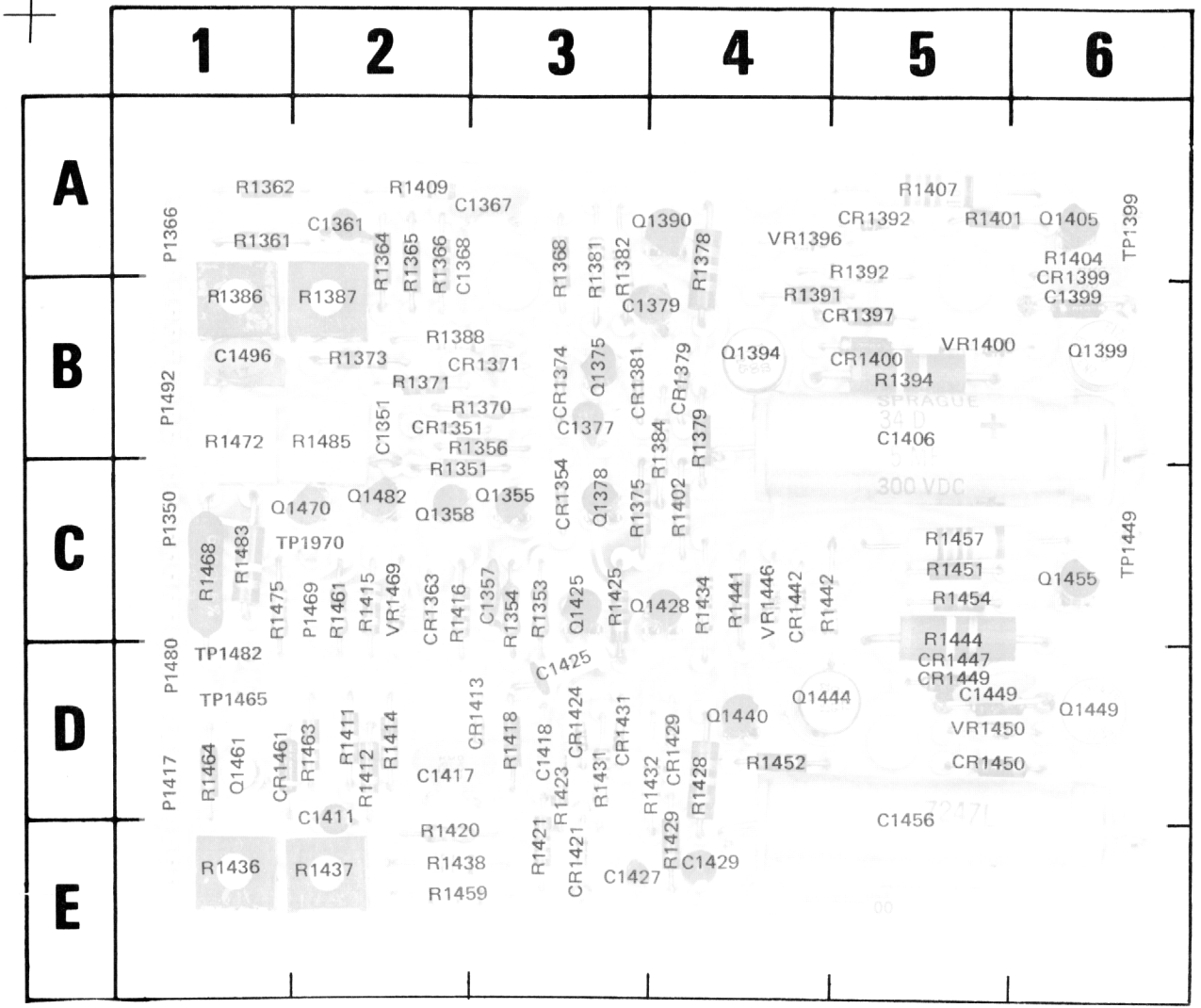

located on back of board.
R1408
CR1470

http://manoman.sqhill.com

Fig. 7-16. A15—Storage circuit board assembly.

CKT NO	GRID LOC	CKT NO	GRID LOC	CKT NO	GRID LOC	CKT NO	GRID LOC	CKT NO	GRID LOC	CKT NO	GRID LOC
C1351	2B	CR1379	4B	Q1375	3B	R1366	2A	R1412	2D	R1457	5C
C1357	3C	CR1381	3B	Q1378	3C	R1368	3A	R1414	2D	R1459	2E
C1361	2A	CR1392	5A	Q1390	4A	R1370	3B	R1415	2C	R1461	2C
C1367	3A	CR1397	5B	Q1394	4B	R1371	2B	R1416	2C	R1463	2D
C1368	2A	CR1399	6A	Q1399	6B	R1373	2B	R1418	3D	R1464	1D
C1377	3B	CR1400	5B	Q1405	6A	R1375	3C	R1420	2E	R1468	1C
C1379	4B	CR1413	3D	Q1425	3C	R1378	4A	R1421	3E	R1472	1B
C1399	6B	CR1421	3E	Q1428	4C	R1379	4B	R1423	3D	R1475	1C
C1406	5B	CR1424	3D	Q1440	4D	R1381	3A	R1425	3C	R1483	1C
C1411	2D	CR1429	4D	Q1444	4D	R1382	3A	R1428	4D	R1485	2B
C1417	2D	CR1431	3D	Q1449	6D	R1384	4B	R1429	4E		
C1418	3D	CR1442	4C	Q1455	6C	R1386	1B	R1431	3D	TP1399	6A
C1425	3D	CR1447	5D	Q1461	1D	R1387	2B	R1432	4D	TP1449	6C
C1427	3E	CR1449	5D	Q1470	2C	R1388	2B	R1434	4C	TP1465	1D
C1429	4E	CR1450	5D	Q1482	2C	R1391	4B	R1436	1E	TP1470	2C
C1449	5D	CR1461	1D			R1392	5A	R1437	2E	TP1482	1D
C1456	5D	P1350	1C	R1351	2C	R1394	5B	R1438	2E		
		P1366	1A	R1353	3C	R1401	5A	R1441	4C		
CR1351	2B	P1417	1E	R1354	3C	R1402	4C	R1442	4C	VR1396	4A
CR1354	3C	P1480	1D	R1356	3B	R1404	6A	R1444	5C	VR1400	5B
CR1363	2C	P1492	1B	R1361	1A	R1407	5A	R1451	5C	VR1446	4C
CR1371	3B	Q1355	3C	R1362	1A	R1409	2A	R1452	4D	VR1450	5D
CR1374	3B	Q1358	2C	R1364	2A	R1411	2D	R1454	5C	VR1469	2C
				R1365	2A						

REV. B, JAN. 1975

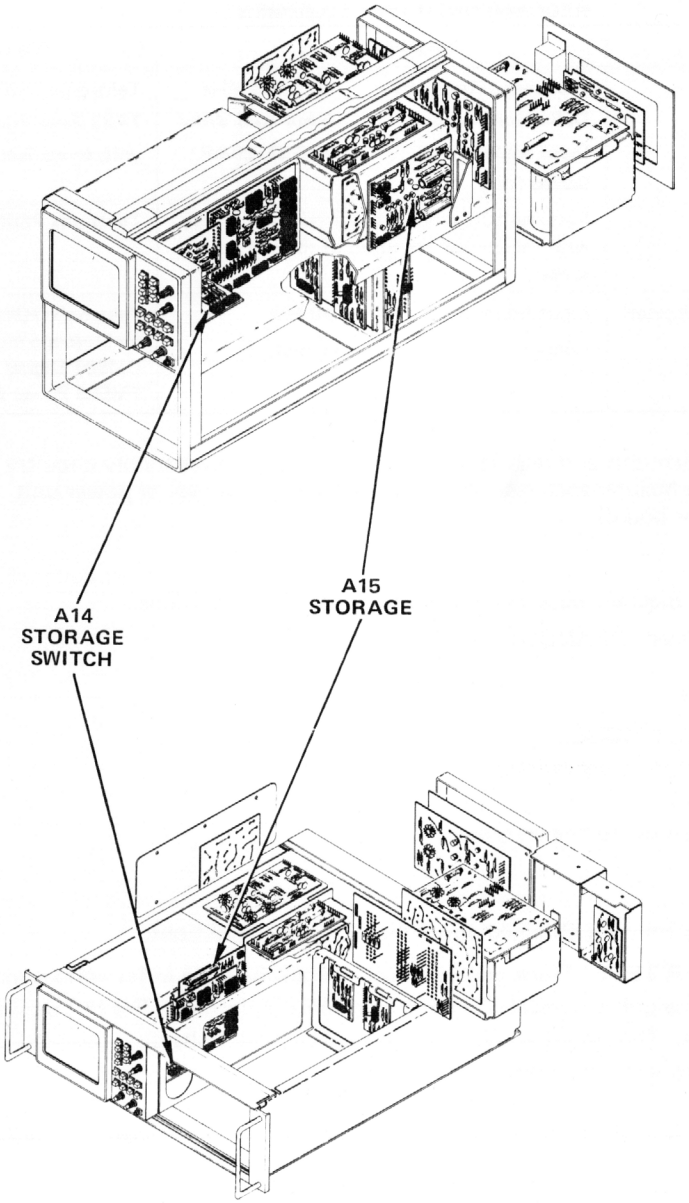

http://manoman.sqhill.com

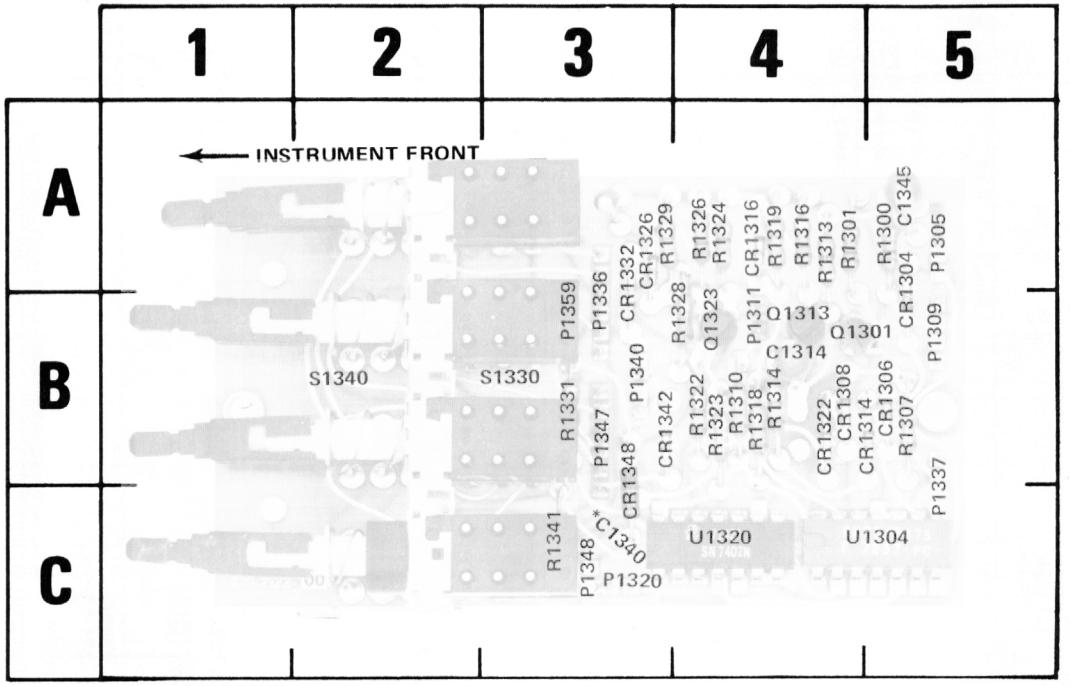

CKT NO	GRID LOC	CKT NO	GRID LOC	CKT NO	GRID LOC
C1314	4B	P1320	3C	R1316	4A
C1340	3C	P1336	3B	R1318	4B
C1345	5A	P1337	5C	R1319	4A
CR1304	5B	P1340	3B	R1322	4B
CR1306	5B	P1347	3C	R1324	4A
CR1308	4B	P1348	3C	R1323	4B
CR1314	4B	P1359	3B	R1328	4B
CR1316	4A			R1329	3A
CR1322	4B	Q1301	4B	R1331	3B
CR1326	3A	Q1313	4B	R1341	3C
CR1332	3A	Q1322	4B		
CR1342	3B			S1330	2B
CR1348	3B	R1300	5A	S1340	2B
		R1301	4A		
P1305	5A	R1307	5B		
P1309	5B	R1313	4A	U1304	5C
P1311	4B	R1314	4B	U1320	4C

*See Parts List for serial number ranges.

Fig. 7-15. A14—Storage Switch circuit board assembly.

Located on back of board
*C1330

http://manoman.sqhill.com

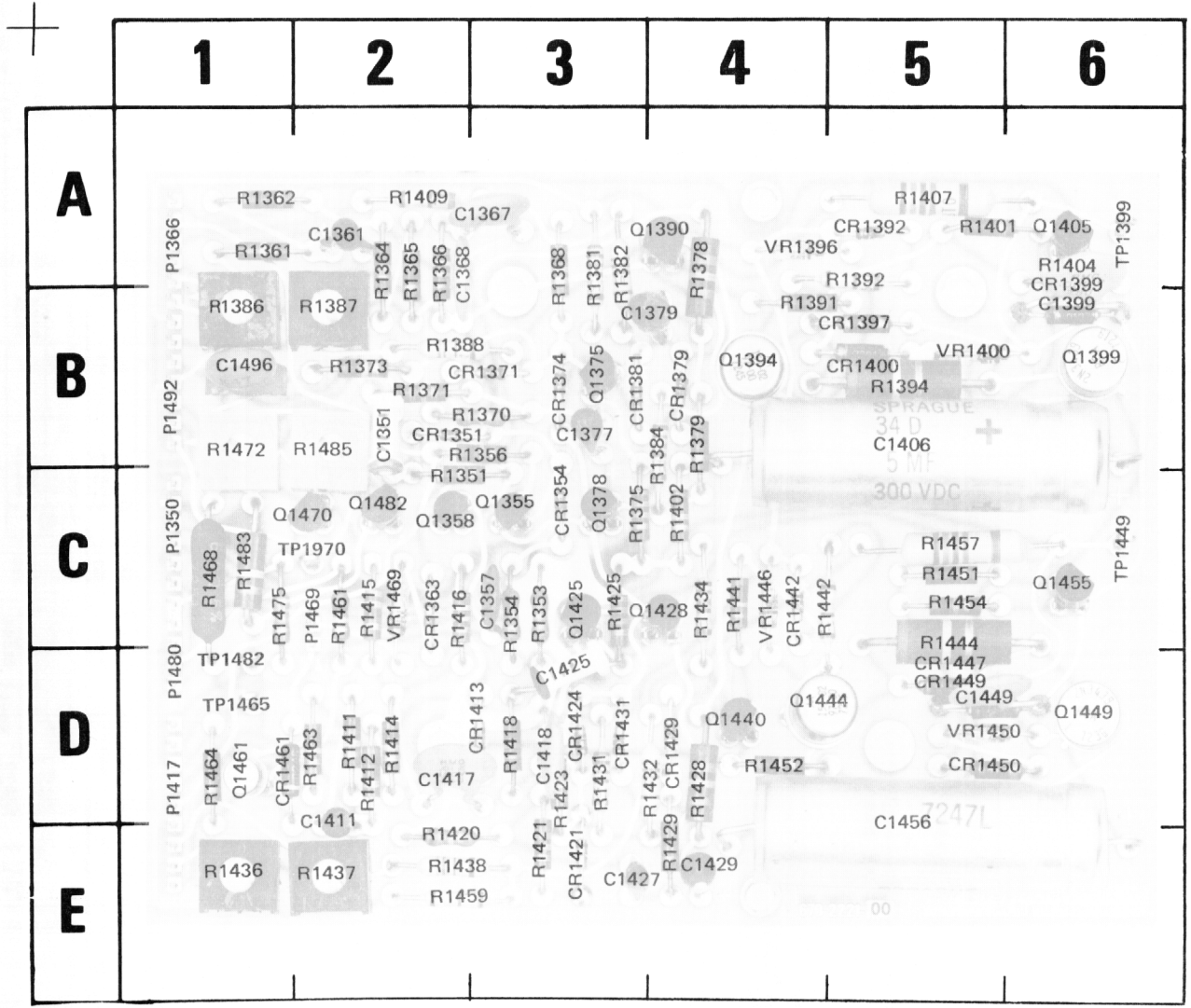

located o
R1408
CR1470

http://manoman.sqhill.com

Fig. 7-16. A15—Storage circuit board assembly.

CKT NO	GRID LOC
C1351	2B
C1357	3C
C1361	2A
C1367	3A
C1368	2A
C1377	3B
C1379	4B
C1399	6B
C1406	5B
C1411	2D
C1417	2D
C1418	3D
C1425	3D
C1427	3E
C1429	4E
C1449	5D
C1456	5D
CR1351	2B
CR1354	3C
CR1363	2C
CR1371	3B
CR1374	3B
CR1379	4B
CR1381	3B
CR1392	5A
CR1397	5B
CR1399	6A
CR1400	5B
CR1413	3D
CR1421	3E
CR1424	3D
CR1429	4D
CR1431	3D
CR1442	4C
CR1447	5D
CR1449	5D
CR1450	5D
CR1461	1D
P1350	1C
P1366	1A
P1417	1E
P1480	1D
P1492	1B
Q1355	3C
Q1358	2C
Q1375	3B
Q1378	3C
Q1390	4A
Q1394	4B
Q1399	6B
Q1405	6A
Q1425	3C
Q1428	4C
Q1440	4D
Q1444	4D
Q1449	6D
Q1455	6C
Q1461	1D
Q1470	2C
Q1482	2C
R1351	2C
R1353	3C
R1354	3C
R1356	3B
R1361	1A
R1362	1A
R1364	2A
R1365	2A
R1366	2A
R1368	3A
R1370	3B
R1371	2B
R1373	2B
R1375	3C
R1378	4A
R1379	4B
R1381	3A
R1382	3A
R1384	4B
R1386	1B
R1387	2B
R1388	2B
R1391	4B
R1392	5A
R1394	5B
R1401	5A
R1402	4C
R1404	6A
R1407	5A
R1409	2A
R1411	2D
R1412	2D
R1414	2D
R1415	2C
R1416	2C
R1418	3D
R1420	2E
R1421	3E
R1423	3D
R1425	3C
R1428	4D
R1429	4E
R1431	3D
R1432	4D
R1434	4C
R1436	1E
R1437	2E
R1438	2E
R1441	4C
R1442	4C
R1444	5C
R1451	5C
R1452	4D
R1454	5C
R1457	5C
R1459	2E
R1461	2C
R1463	2D
R1464	1D
R1468	1C
R1472	1B
R1475	1C
R1483	1C
R1485	2B
TP1399	6A
TP1449	6C
TP1465	1D
TP1470	2C
TP1482	1D
VR1396	4A
VR1400	5B
VR1446	4C
VR1450	5D
VR1469	2C

http://manoman.sqhill.com

VOLTAGE AND WAVEFORM CONDITIONS

WARNING

Dangerous potentials exist at several points throughout this instrument. When the instrument is operated with the covers removed, do not touch exposed connections or components. Some transistors have voltages present on their cases. Disconnect the power source before cleaning the instrument or replacing parts.

The voltages and waveforms shown on this diagram were obtained by using the recommended test equipment and test set-ups listed below.

RECOMMENDED TEST EQUIPMENT

Item	Specifications		Recommended Type
Oscilloscope	Frequency Response Deflection Factor Input Impedance Sweep Rate	Dc to 65 MHz 5 mV to 5 V/div 10 MΩ, 20 pF 500 ns	Tektronix 7603 or 7313 equipped with 7A15A Amplifier and 7B-series time-base unit, or equivalent. (7A13 Differential Comparator used in place of 7A15A for calibrated offset voltages).
Probe	Fast rise 10X attenuation probe compatible with the vertical amplifier of the test oscilloscope.		Tektronix P6053B, or equivalent.
Voltmeter (Non-Loading Digital Multimeter)	Input Impedance	10 MΩ	Tektronix 7D13 Digital Multimeter (test oscilloscope must have readout system); or DM501 Digital Multi-Meter with TM501 or TM503 Power Module, or equivalent.

VOLTAGE MEASUREMENTS

Voltage measurements on this diagram were made under the following conditions:

Set front-panel controls to mid-range (except VIEW TIME fully counterclockwise).

Set VERT MODE for CHOP.

Set TRIG SOURCE for VERT MODE.

Set storage controls for store and auto erase operation.

No plug-in units are installed.

Voltmeter common is connected to chassis ground.

WAVEFORMS

Waveforms shown on this diagram were obtained under the following conditions:

7313 OSCILLOSCOPE UNDER TEST. Front-panel controls are set the same as for voltage measurements. A 7A15A amplifier unit and a 7B53A Time-Base unit are installed in the mainframe under test. The test oscilloscope 4 volt calibrator signal is applied to the amplifier unit. The amplifier unit is set for 1 V/division deflection centered on the crt. The 7B53A is set for a triggered sweep and 1 ms/division sweep rate.

TEST OSCILLOSCOPE. The test oscilloscope is internally triggered and set to single sweep mode. The test oscilloscope is ac coupled.

Tolerances of voltages and waveforms shown are within 20%.

http://manoman.sqhill.com

TYPE	V_{CC} +5V	GND
7473N	4	3,10,11
7402N	14	6,7

UPPER (S1330)

STORE | ENHANCE | AUTO ERASE | ERASE

SWEEP LOCKOUT TO P59 ①

P1309 R1307 1.6k CR1306 CR1308

SWP (+) GATE TO P1025 CALIB BRD ⑦ P1305

+5V R1310 16k P1311-1 CW R1311 500k VIEWTIME P1311-2

C1314 22µF

SWP (+) GATE FROM P59 ① P1309 Q1301 R1300 1k R1301 1k +5V

U1320B ¼ 7402N CR1304 +5V

U1304B ½ 7473N R1314 180 CR1314 CR1316 R1316 1M R1319 680 R1318 300 +5V

Q1313

U1304A ½ 7473N R1322 180 CR1322 C1322 2.2µF Q1323 R1326 1M CR1326 R1323 240k R1328 1.5k +5V R1329 3.3k

U1320C ¼ 7402N

U1320D ¼ 7402N R1313 47 R1324 47

U1320A ¼ 7402N R1331 3.3k R1341 3.3k +5V

P1336 P1366 P1347 P1417

C1330 0.1µF

R1361 510 k C1361 1 µF R1362 1k

R1365 3.3M C1367 .01 R1364 10k R1366 390k C1368 .01 R1373 100k

R1370 180 k C1377 0.1 R1371 56k R1375 33k CR1371 CR1374 Q1375 Q1378 -15V

R1378 16k C1379 15 µF CR1379 CR1381 R1382 9.31 k R1379 220 R1381 31.6k -75V

UPR NON-STORE LEVEL R1386 5k

UPR STORE LEVEL R1387 15k

R1388 6.34k

Q1390 R1384 26.7k

R1391 75k Q1394 R1392 29.4k CR1392 -75V

C1399 .005 +250V CR1399 +249.4 Q1399 +11.8 C1406 5 µF

R1394 120k +13 CR1397 VR1400 120 V CR1400 +250V

VR1396 5.1V -75V R1404 10k Q1405 R1401 2.2k R1402 82k

R1409 29.4 k R1407 182 k TP1399

CR1363 +130V R1408 1K

P1480 STB UPR LOCATE ZONE

50 V 200 ms 0V V1099

VR1469 4.3V P1469 TO P1109 ⑧

CR1332 REMOTE ERASE IN J1049 P1340

INTEGRATE TO P1250 ⑧ P1469 P1480 CE #1 CE #2 STB LWR

CR1461 CR1413 R1461 100k Q1461 R1463 20k R1464 2.0M R1468 6.8 TP1465

COLLIMATION +50V +50V R1472 100k Q1470 R1475 43k TP1470

50 V 200 ms 0V TP1449

P1417-7 C1465 .01µF S1465 INTEGRATE -75V

CR1342

P1336-5 P1366-5 R1358 1.2 k R1359 10 k ENHANCE P1359 CW P1417-8

PARTIAL STORAGE BRD A15

R1353 180 k C1357 .015 R1354 27 k CR1354 R1356 10k Q1358 Q1355 CR1351 R1351 47k C1351 100

ENHANCE TRIGGER P1320 P1350

A14 STORAGE SWITCH BRD

P1417-5 P1347-5

C1340 0.1µF

FROM P1027 CALIB BRD ⑦ P1337 +5V GND C1345 22µF

DS1001 POWER (ON) P1348 CR1348 +5V

R1459 29.4K R1457 182k

C1449 .005 +250V CR1449 +249 Q1449 +8.2 R1444 120k

R1428 16k C1429 15µF CR1429 CR1431 R1432 9.31k R1429 220 R1431 31.6k -75V

R1420 180k C1427 0.1 R1421 56k R1425 33k CR1421 CR1424 Q1425 Q1428 -15V

R1415 3.3M C1417 .01 R1414 10k C1418 .01 R1418 10k R1412 1k R1416 390K R1423 100k R1411 510k C1411 1µF

Q1440 R1441 75k Q1444 R1442 29.4k CR1442 -75V

CR1447 VR1450 120 V CR1450 VR1446 5.1V -75V R1454 10k Q1455 R1451 2.2k R1452 82k C1456 5 µF

R1434 26.7k

R1438 6.34k R1437 15k LWR STORE LEVEL R1436 5k LWR NON-STORE LEVEL +15V

PARTIAL STORAGE BOARD A15

-15V +250V +130V +50V +15V -75V C1496 47µF P1492 FROM P1172 ⑧ Z AXIS BRD

STORE | ENHANCE | AUTO ERASE | ERASE

LOWER (S1340)

SEE PARTS LIST FOR EARLIER VALUES AND SERIAL NUMBER RANGES OF PARTS MARKED WITH BLUE OUTLINE.

SEE PARTS LIST FOR SEMICONDUCTOR TYPES.

STORAGE CIRCUIT ⑩

http://manoman.sqhill.com

CKT NO	GRID LOC	CKT NO	GRID LOC	CKT NO	GRID LOC	CKT NO	GRID LOC
C2101	2C	P2171	1C	R2179	2E	R2286	4D
C2109	2C			R2182	4E	R2287	4D
C2112	3C	Q2108	2C	R2183	4E	R2288	4D
C2115	2C	Q2112	3B	R2191	5F	R2289	3D
C2117	1C	Q2138	6C	R2193	5E	R2291	4D
C2119	1C	Q2153	3E	R2194	5E	R2292	4D
C2121	1C	Q2159	6D	R2196	5E	R2293	3D
C2135	6D	Q2215	1F	R2197	5E	R2294	3D
C2140	5C	Q2223	1E	R2198	5E	R2295	3D
C2144	5C	Q2225	1E	R2198	4C	R2297	3D
C2145	6B	Q2229	1E	R2199	5E	R2298	4D
C2155	5E	Q2240	1E	R2201	5F	R2299	3D
C2183	4E	Q2286	4C	R2202	5F		
C2214	2E	Q2287	4D	R2203	5F	S2110	2C
C2242	6A	Q2296	3D	R2204	5F		
C2244	2B	Q2299	4D	R2206	5F	TP2112	1A
C2255	5A			R2207	5F	TP2115	2C
C2281	3C	R2101	2C	R2208	5G	TP2117	1B
		R2102	2C	R2209	5G	TP2119	1B
CR2121	4D	R2104	2C	R2211	2E	TP2129	4C
CR2124	5D	R2105	2C	R2214	2E	TP2131	5D
CR2125	5D	R2107	2C	R2220	1E	TP2133	5D
CR2140	6C	R2108	2C	R2221	1E	TP2135	6D
CR2141	5C	R2109	1C	R2215	1E	TP2154	5F
CR2142	6B	R2112	2B	R2219	1E	TP2159	6B
CR2145	5C	R2113	2B	R2217	1F	TP2180	3E
CR2146	5C	R2122	5D	R2227	1D	TP2199	3F
CR2156	5D	R2123	5D	R2226	1D	TP2209	4F
CR2157	5D	R2127	4C	R2229	1F	TP2214	1F
CR2162	4F	R2129	4D	R2231	5C	TP2232	1A
CR2163	3F	R2135	5E	R2235	6A	TP2251	2D
CR2166	4F	R2137	6C	R2236	6B	TP2296	3E
CR2167	4F	R2139	6B	R2237	6B	TP2299	3D
CR2170	2F	R2144	6C	R2238	6B		
CR2171	2F	R2146	5C	R2241	1D	U2120	2D
CR2174	3F	R2148	6C	R2251	2E	U2126	5D
CR2175	3F	R2150	2E	R2252	3D	U2155A	6E
CR2196	5C	R2151	3E	R2253	2E	U2159	6F
CR2192	5F	R2153	3E	R2254	4C	U2180	4F
CR2193	5E	R2155	5E	R2261	3C	U2185	4B
CR2198	5E	R2158	5D	R2265	4B	U2190	2F
CR2226	1D	R2161	1G	R2266	5B	U2232	5B
		R2162	3F	R2268	5B	U2244	1B
J2138	5C	R2163	3F	R2273	1B	U2250	2D
J2132	5C	R2165	1G	R2274	2B	U2260	5B
J2139	5D	R2166	4F	R2275	2B	U2270	2B
J2192	1C	R2167	4F	R2276	4B	U2272	3B
J2296	3E	R2169	1F	R2277	4B	U2274	3B
J2299	4E	R2170	2F	R2278	4C	U2275	4B
		R2171	2F	R2279	3C	U2278	4B
L2283	4C	R2173	1F	R2280	4C	U2284	3C
		R2174	3F	R2281	3C		
P2118	1F	R2175	2F	R2282	4C	VR2262	5B
P2165	2G	R2177	2E	R2283	4C	VR2263	5B
P2166	4G	R2178	2E	R2284	3C	VR2264	5C
P2167	6F			R2285	3D		

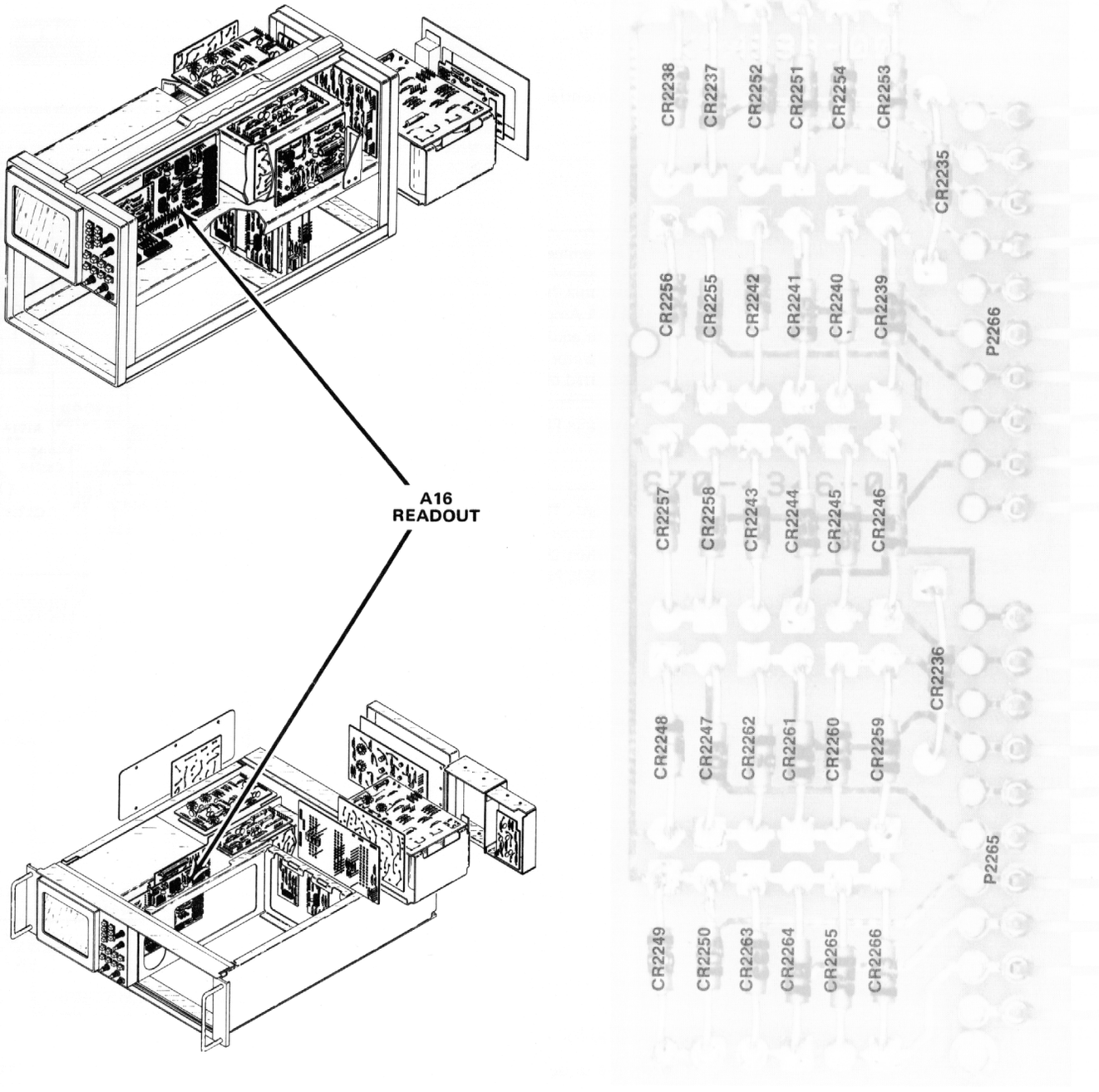

Fig. 7-17B. A17—Protection circuit board (SN B220000 & up).

http://manoman.sqhill.com

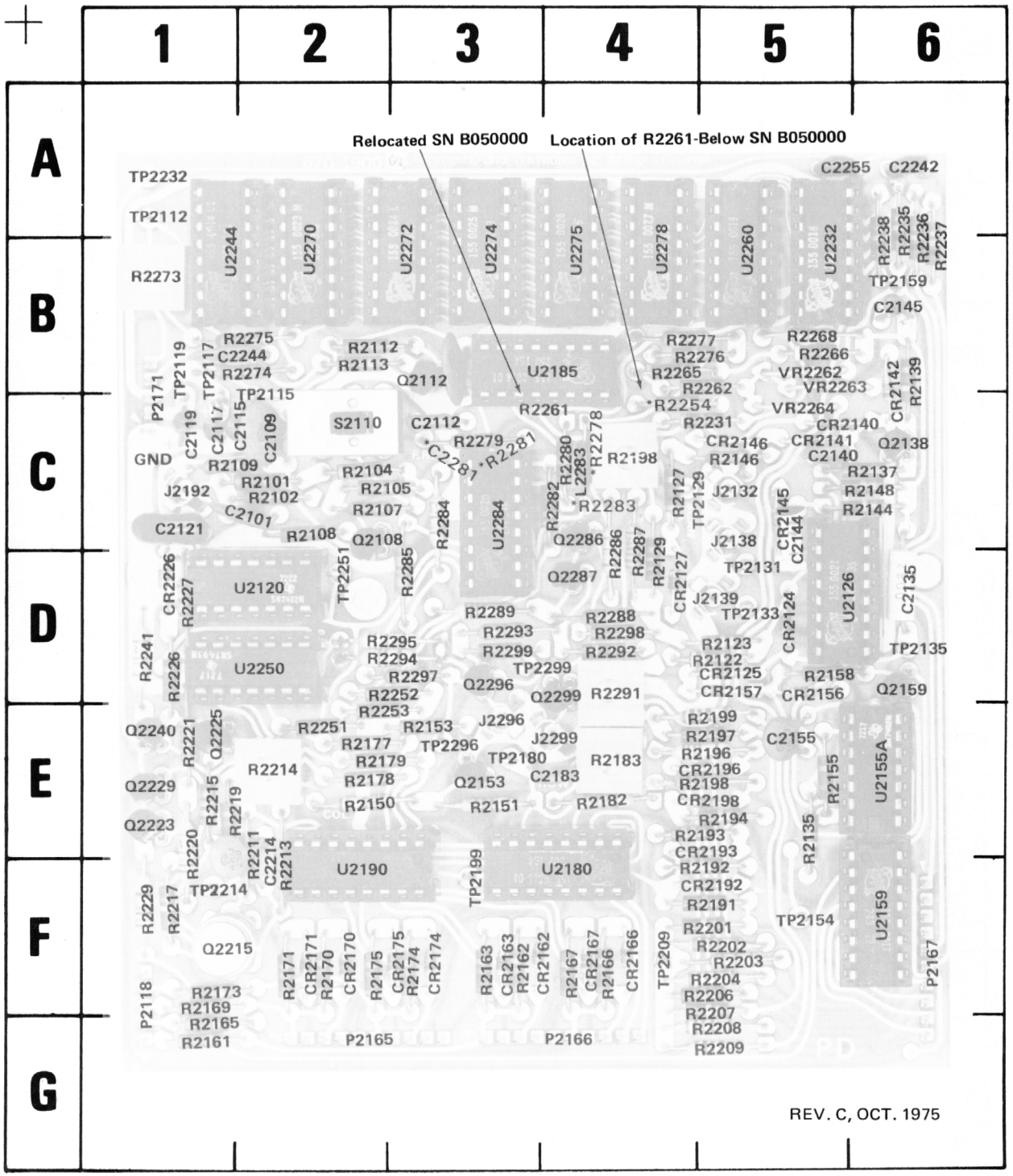

*Moved at SN B110000 & Up.

Fig. 7-17A. A16—Readout circuit board assembly.

http://manoman.sqhill.com

VOLTAGE AND WAVEFORM CONDITIONS

WARNING

Dangerous potentials exist at several points throughout this instrument. When the instrument is operated with the covers removed, do not touch exposed connections or components. Some transistors have voltages present on their cases. Disconnect the power source before cleaning the instrument or replacing parts.

The voltages and waveforms shown on this diagram were obtained by using the recommended test equipment and test set-up listed below.

RECOMMENDED TEST EQUIPMENT

Item	Specifications		Recommended Type
Oscilloscope	Frequency Response Deflection Factor Input Impedance Sweep Rate	Dc to 65 MHz 5 mV to 5 V/div 10 MΩ, 20 pF 500 ns	Tektronix 7603 or 7313 equipped with 7A15A Amplifier and 7B-series time-base unit, or equivalent. (7A13 Differential Comparator used in place of 7A15A for calibrated offset voltages).
Probe	Fast rise 10X attenuation probe compatible with the vertical amplifier of the test oscilloscope.		Tektronix P6053B, or equivalent.
Voltmeter (Non-Loading Digital Multimeter)	Input Impedance Range	10 MΩ 0 - 500 V	Tektronix 7D13 Digital Multimeter (test oscilloscope must have readout system); or DM501 Digital Multi-Meter with TM501 or TM503 Power Module, or equivalent.

VOLTAGE MEASUREMENTS

Voltage measurements on this diagram were made under the following conditions:

Set front-panel controls to mid-range.

Set VERT MODE for CHOP.

Set TRIG SOURCE for VERT MODE.

Set storage controls for non-store operation.

No plug-in units are installed.

Voltmeter common is connected to chassis ground.

WAVEFORMS

Waveforms shown on this diagram were obtained under the following conditions:

7313 OSCILLOSCOPE UNDER TEST. Front-panel controls are set the same as for voltage measurements. A 7A15A amplifier unit and a 7B53A Time-Base unit are installed in the mainframe under test. The test oscilloscope 4 volt calibrator signal is applied to the amplifier unit. The amplifier unit is set for 1 V/division deflection centered on the crt. The 7B53A is set for a triggered sweep and 1 ms/division sweep rate.

TEST OSCILLOSCOPE. The test oscilloscope is internally triggered and ac coupled.

Tolerances of voltages and waveforms shown are within 20%. Calibrated offset voltages are marked on waveforms at center vertical graticule line. These voltages indicate the comparison voltages of the 7A13.

http://manoman.sqhill.com

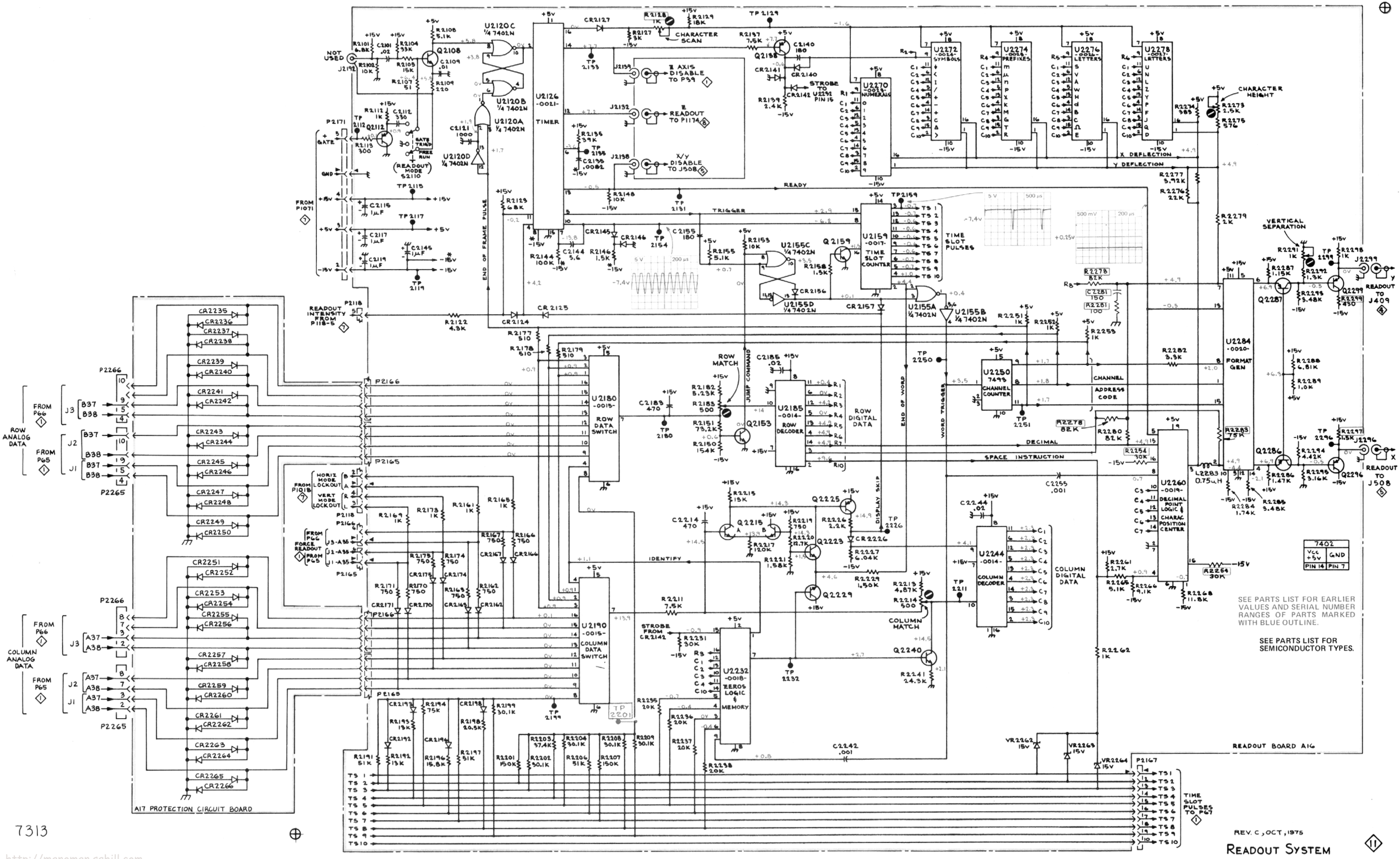

http://manoman.sqhill.com

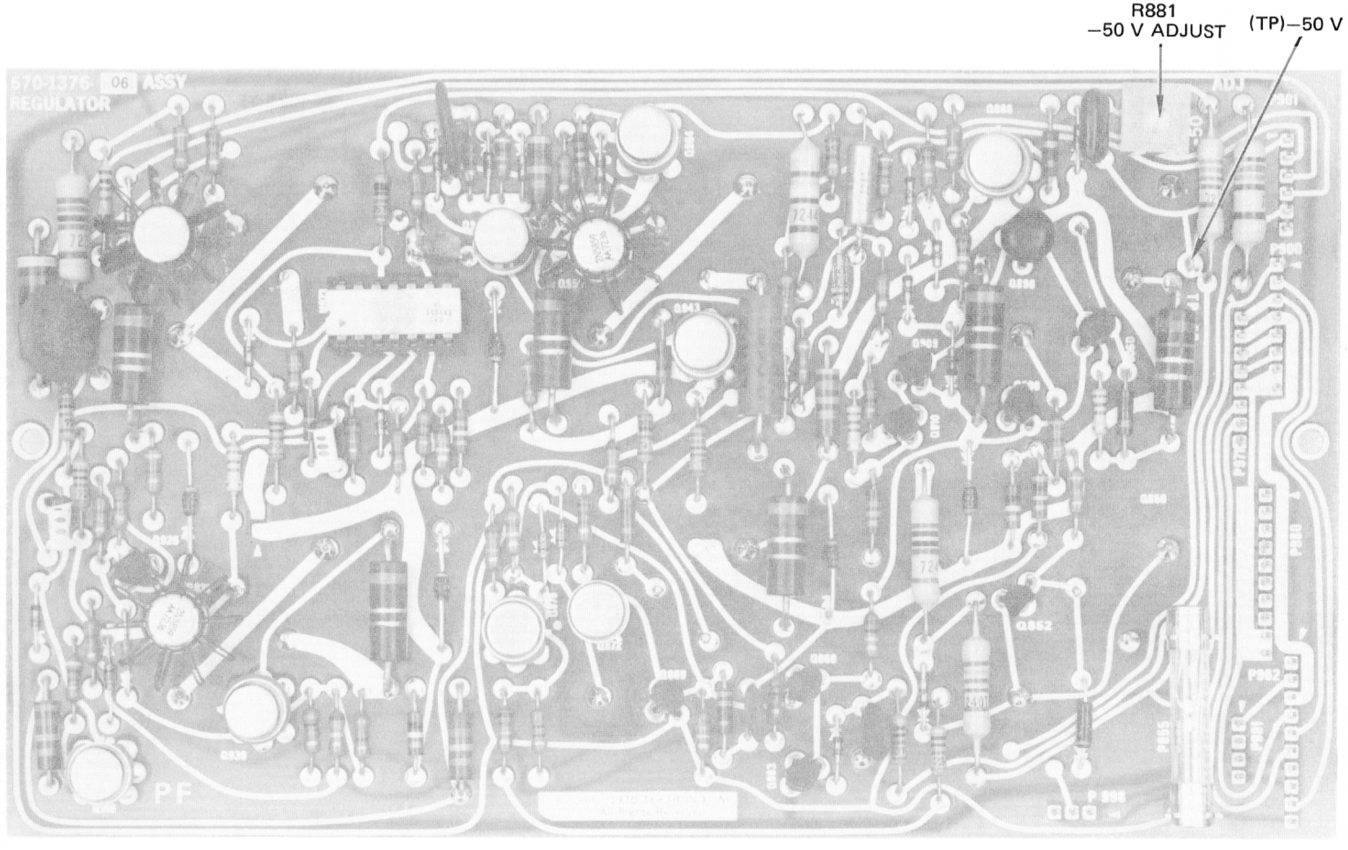

Fig. 7-18. A12—Location of −50 V test point and adjustment.

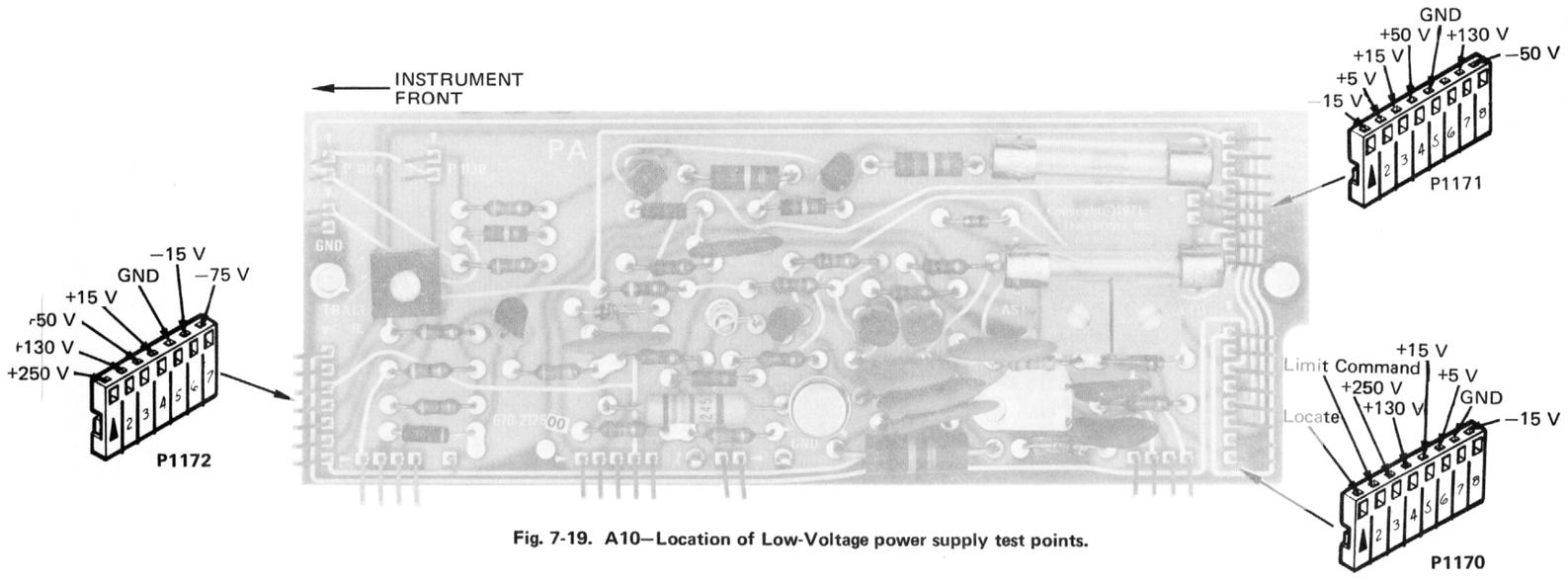

Fig. 7-19. A10—Location of Low-Voltage power supply test points.

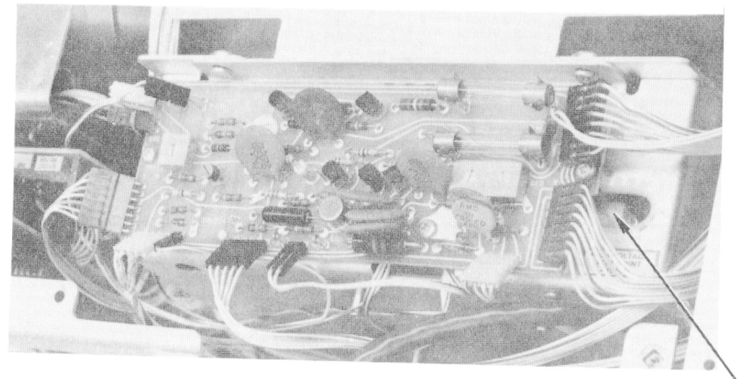

R7313

Fig. 7-20. Location of High-Voltage test points.

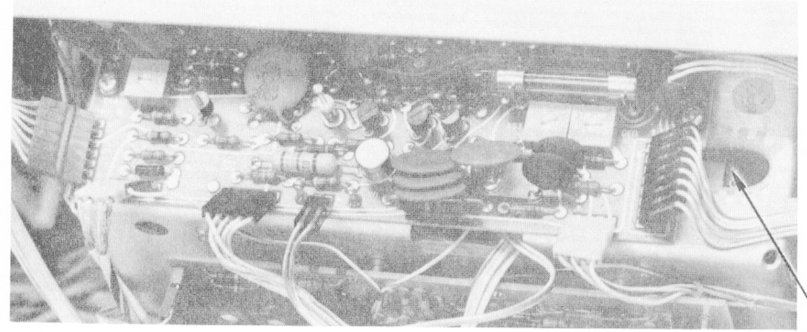

7313

http://manoman.sqhill.com

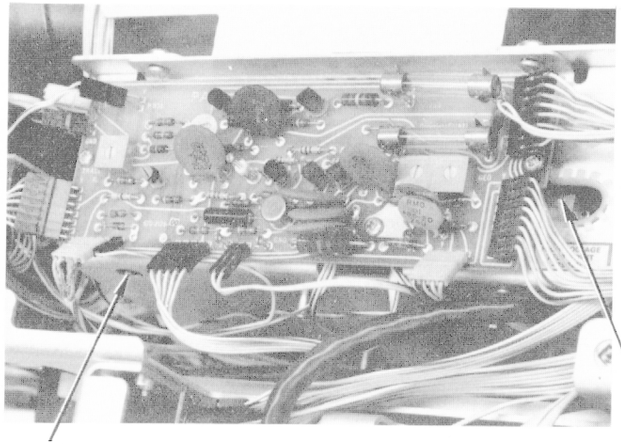

R7313

REV. B, JAN. 1975

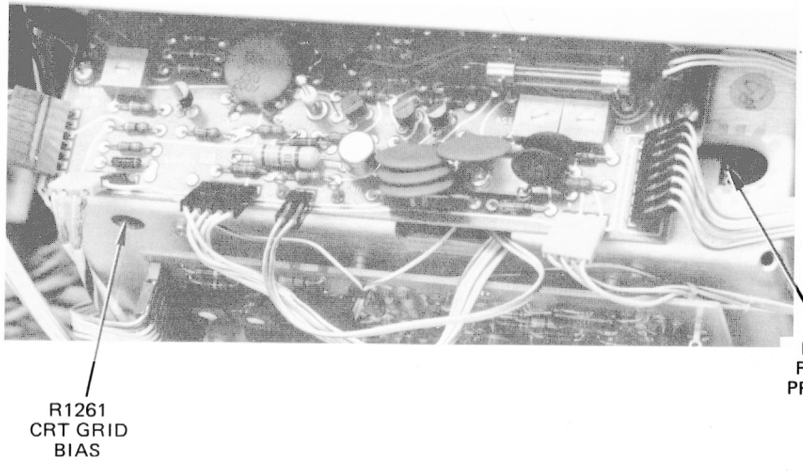

7313

REV. B, JAN. 1975

Fig. 7-21. Location of Focus Preset and CRT Grid Bias adjustments.

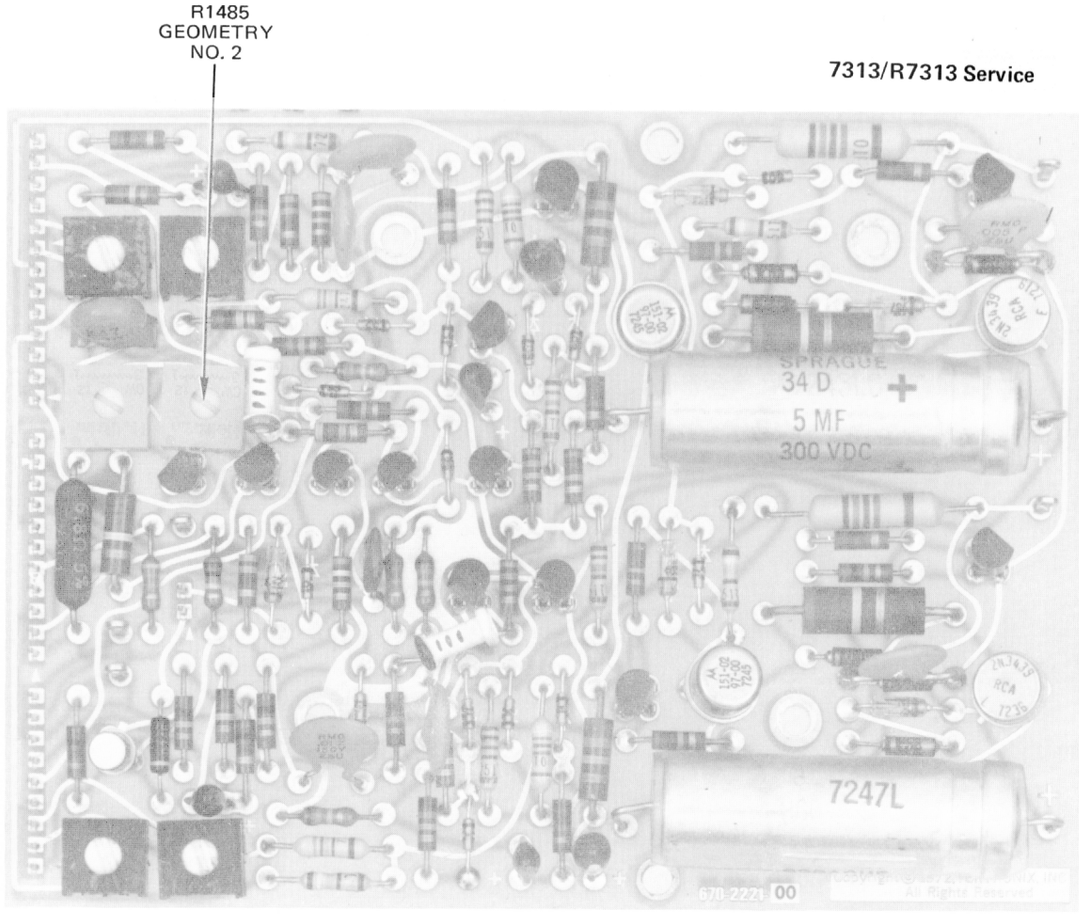

Fig. 7-23. A15—Location of Geometry No. 2 adjustment.

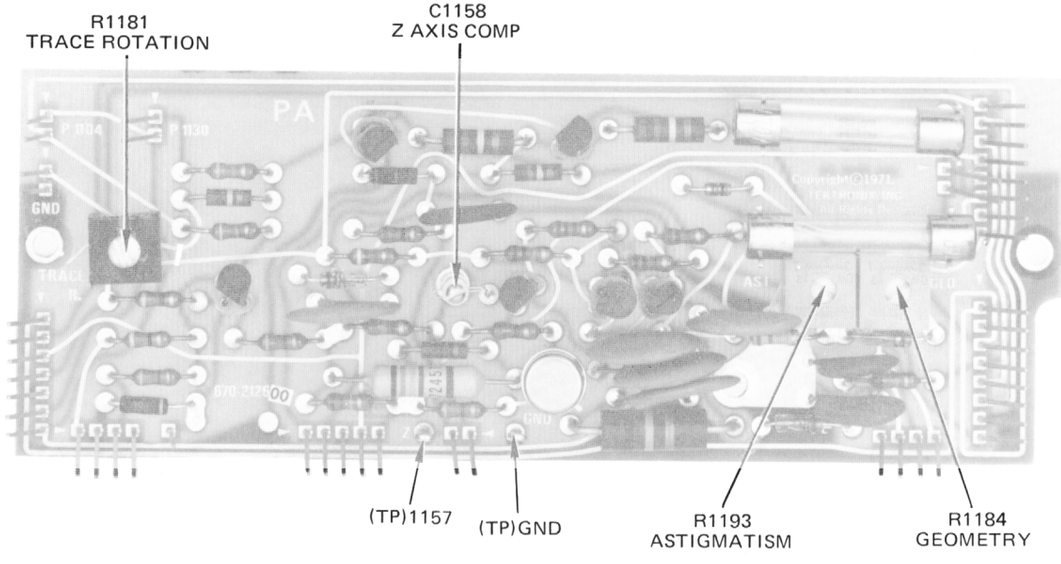

Fig. 7-22. A10—Adjustment locations on the Z-Axis board.

http://manoman.sqhill.com

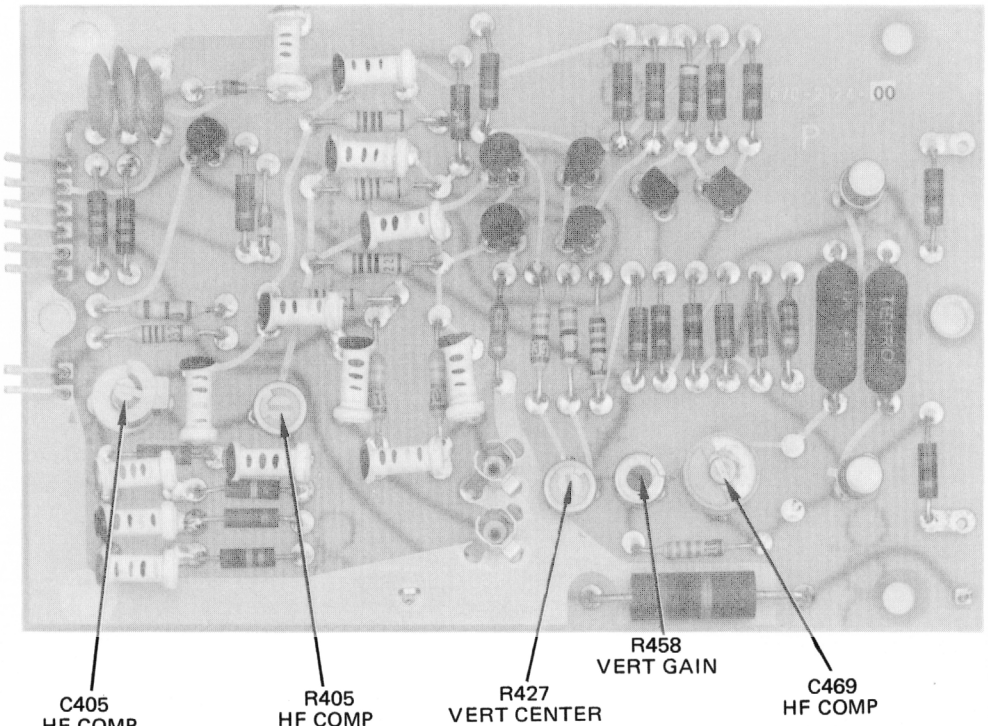

Fig. 7-24. A5—Location of Vertical System adjustments.

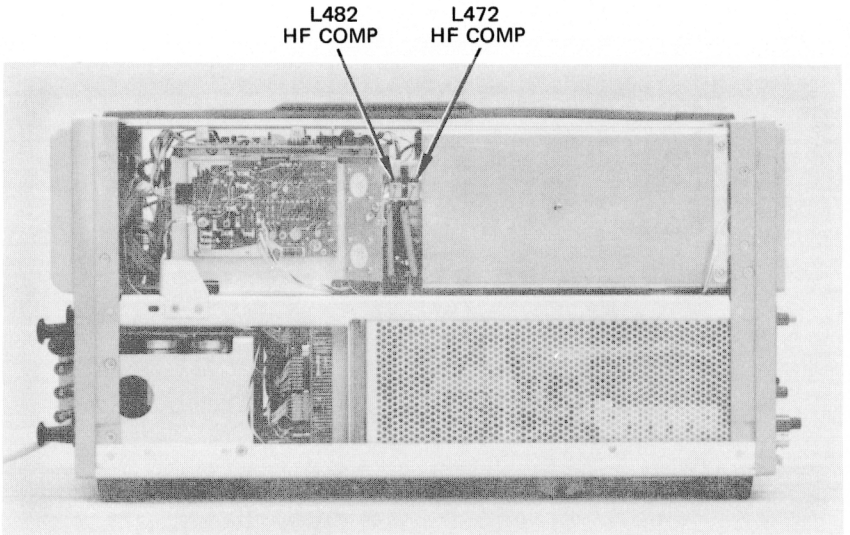

Ⓐ

Fig. 7-25. Vertical high-frequency compensation adjustments on instrument chassis (7313 shown).

http://manoman.sqhill.com

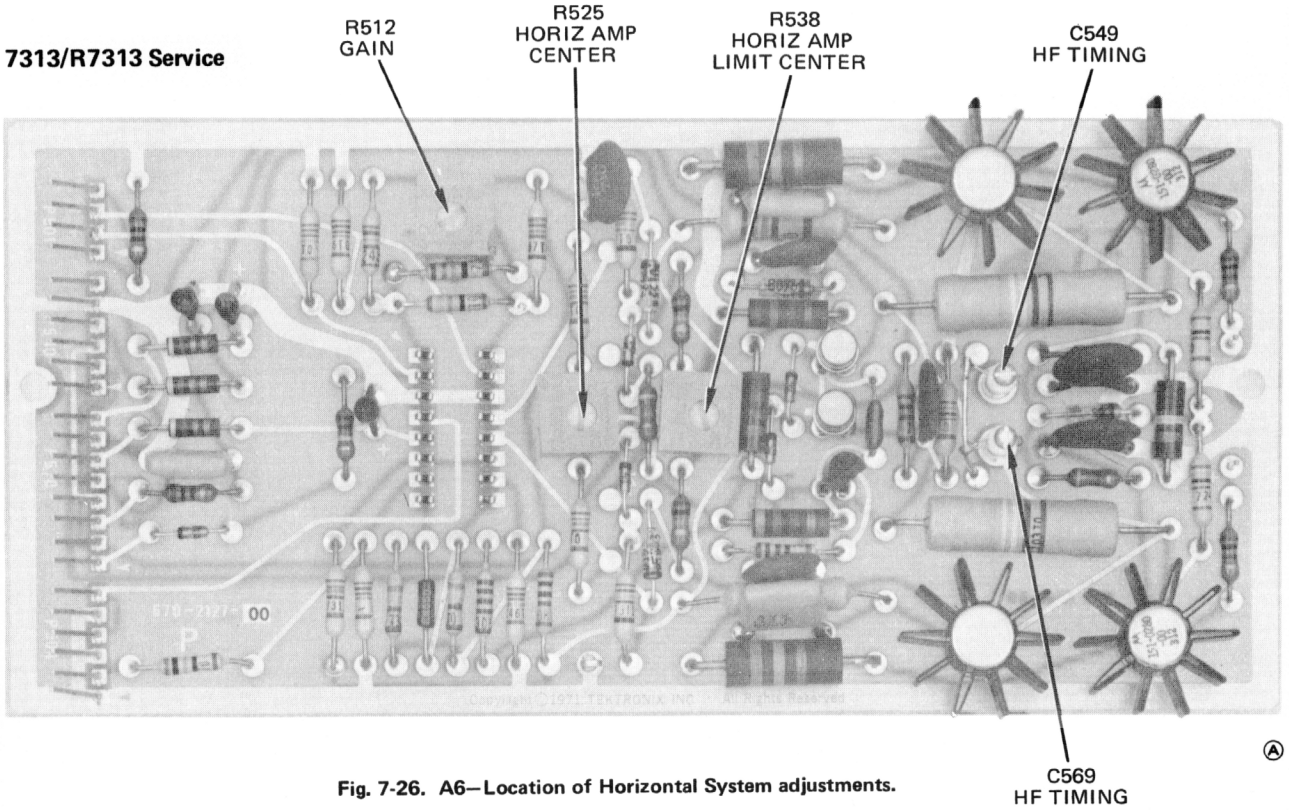

Fig. 7-26. A6—Location of Horizontal System adjustments.

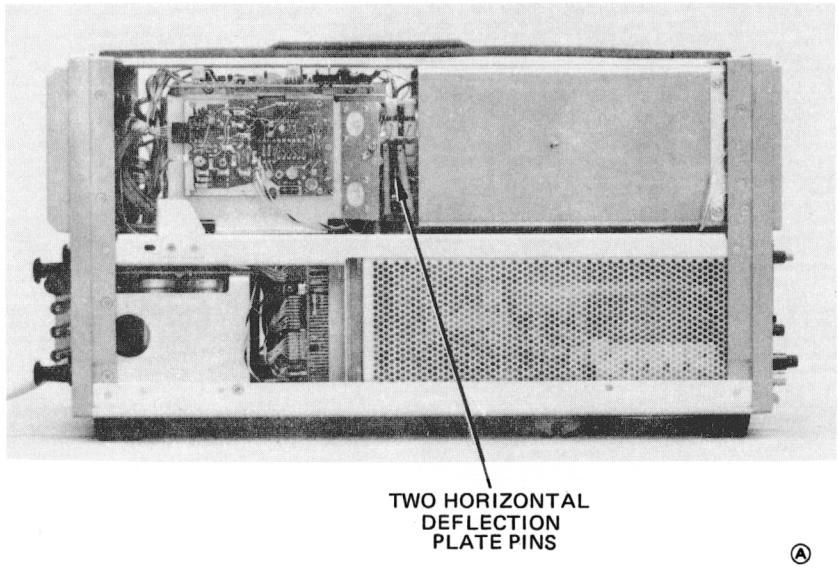

Fig. 7-27. Location of horizontal deflection leads.

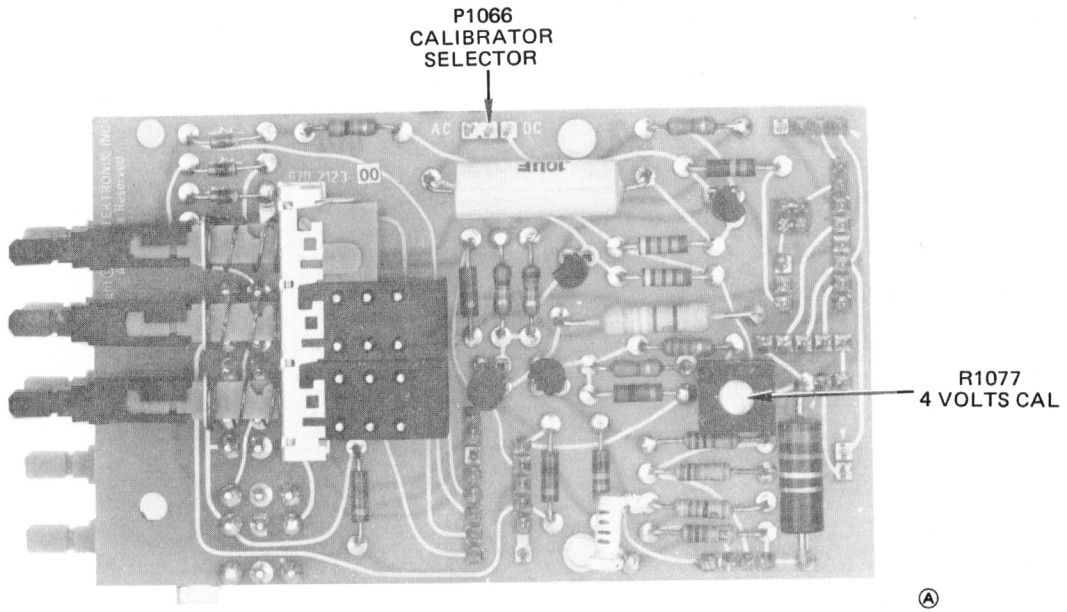

Fig. 7-28. A8—Location of Calibrator Selector and 4 Volts Cal adjustment.

http://manoman.sqhill.com

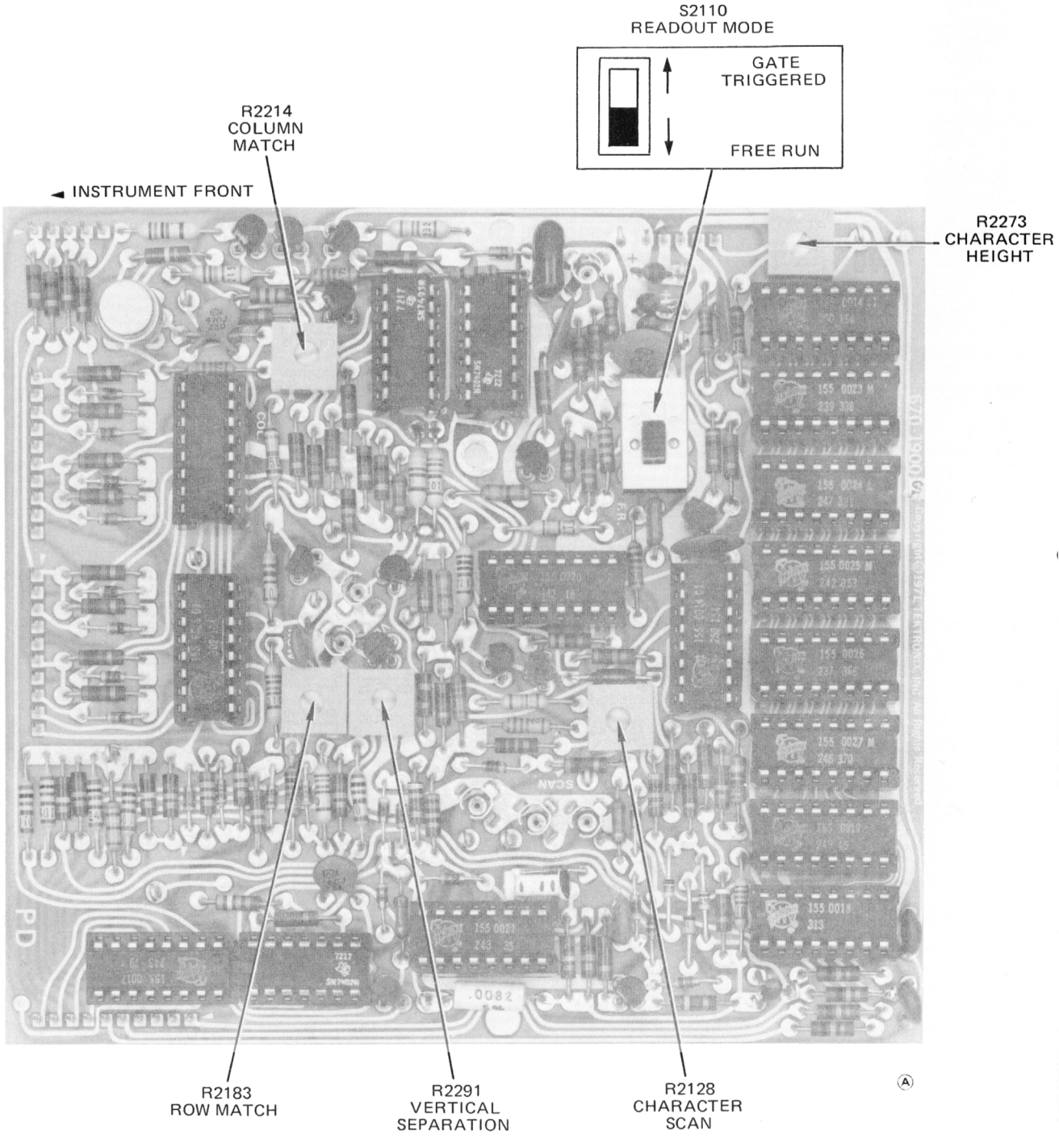

Fig. 7-29. A16—Location of Readout System adjustments.

http://manoman.sqhill.com

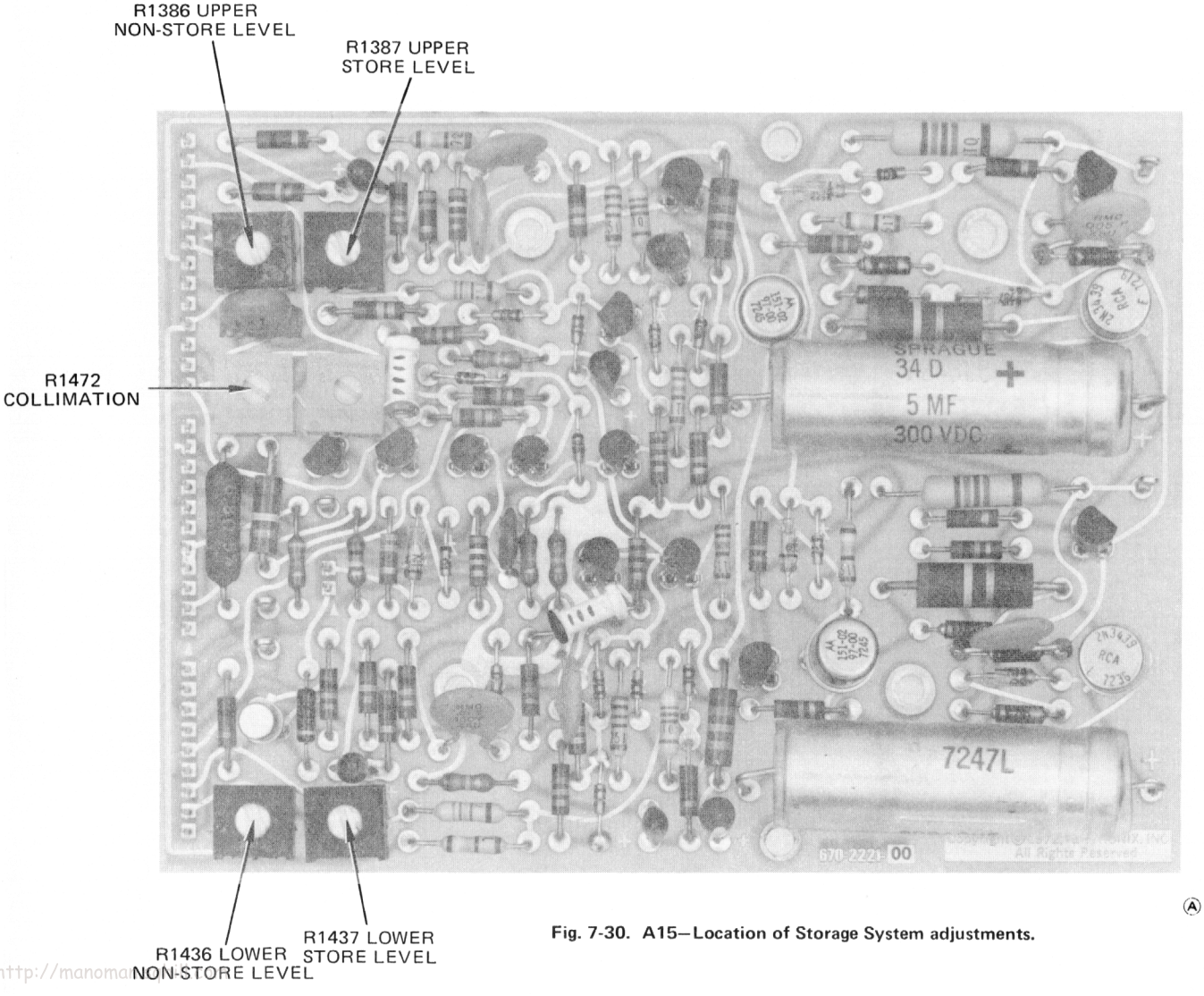

Fig. 7-30. A15—Location of Storage System adjustments.

http://manoma

REPLACEABLE MECHANICAL PARTS

PARTS ORDERING INFORMATION

Replacement parts are available from or through your local Tektronix, Inc. Field Office or representative.

Changes to Tektronix instruments are sometimes made to accommodate improved components as they become available, and to give you the benefit of the latest circuit improvements developed in our engineering department. It is therefore important, when ordering parts, to include the following information in your order: Part number, instrument type or number, serial number, and modification number if applicable.

If a part you have ordered has been replaced with a new or improved part, your local Tektronix, Inc. Field Office or representative will contact you concerning any change in part number.

Change information, if any, is located at the rear of this manual.

SPECIAL NOTES AND SYMBOLS

X000	Part first added at this serial number
00X	Part removed after this serial number

FIGURE AND INDEX NUMBERS

Items in this section are referenced by figure and index numbers to the illustrations.

INDENTATION SYSTEM

This mechanical parts list is indented to indicate item relationships. Following is an example of the indentation system used in the description column.

1 2 3 4 5 *Name & Description*

Assembly and/or Component
Attaching parts for Assembly and/or Component
- - - * - - -
Detail Part of Assembly and/or Component
Attaching parts for Detail Part
- - - * - - -
Parts of Detail Part
Attaching parts for Parts of Detail Part
- - - * - - -

Attaching Parts always appear in the same indentation as the item it mounts, while the detail parts are indented to the right. Indented items are part of, and included with, the next higher indentation. The separation symbol - - - * - - - indicates the end of attaching parts.

Attaching parts must be purchased separately, unless otherwise specified.

ITEM NAME

In the Parts List, an Item Name is separated from the description by a colon (:). Because of space limitations, an Item Name may sometimes appear as incomplete. For further Item Name identification, the U.S. Federal Cataloging Handbook H6-1 can be utilized where possible.

ABBREVIATIONS

"	INCH
#	NUMBER SIZE
ACTR	ACTUATOR
ADPTR	ADAPTER
ALIGN	ALIGNMENT
AL	ALUMINUM
ASSEM	ASSEMBLED
ASSY	ASSEMBLY
ATTEN	ATTENUATOR
AWG	AMERICAN WIRE GAGE
BD	BOARD
BRKT	BRACKET
BRS	BRASS
BRZ	BRONZE
BSHG	BUSHING
CAB	CABINET
CAP	CAPACITOR
CER	CERAMIC
CHAS	CHASSIS
CKT	CIRCUIT
COMP	COMPOSITION
CONN	CONNECTOR
COV	COVER
CPLG	COUPLING
CRT	CATHODE RAY TUBE
DEG	DEGREE
DWR	DRAWER
ELCTRN	ELECTRON
ELEC	ELECTRICAL
ELCTLT	ELECTROLYTIC
ELEM	ELEMENT
EPL	ELECTRICAL PARTS LIST
EQPT	EQUIPMENT
EXT	EXTERNAL
FIL	FILLISTER HEAD
FLEX	FLEXIBLE
FLH	FLAT HEAD
FLTR	FILTER
FR	FRAME or FRONT
FSTNR	FASTENER
FT	FOOT
FXD	FIXED
GSKT	GASKET
HDL	HANDLE
HEX	HEXAGON
HEX HD	HEXAGONAL HEAD
HEX SOC	HEXAGONAL SOCKET
HLCPS	HELICAL COMPRESSION
HLEXT	HELICAL EXTENSION
HV	HIGH VOLTAGE
IC	INTEGRATED CIRCUIT
ID	INSIDE DIAMETER
IDENT	IDENTIFICATION
IMPLR	IMPELLER
IN	INCH
INCAND	INCANDESCENT
INSUL	INSULATOR
INTL	INTERNAL
LPHLDR	LAMPHOLDER
MACH	MACHINE
MECH	MECHANICAL
MTG	MOUNTING
NIP	NIPPLE
NON WIRE	NOT WIRE WOUND
OBD	ORDER BY DESCRIPTION
OD	OUTSIDE DIAMETER
OVH	OVAL HEAD
PH BRZ	PHOSPHOR BRONZE
PL	PLAIN or PLATE
PLSTC	PLASTIC
PN	PART NUMBER
PNH	PAN HEAD
PWR	POWER
RCPT	RECEPTACLE
RES	RESISTOR
RGD	RIGID
RLF	RELIEF
RTNR	RETAINER
SCH	SOCKET HEAD
SCOPE	OSCILLOSCOPE
SCR	SCREW
SE	SINGLE END
SECT	SECTION
SEMICOND	SEMICONDUCTOR
SHLD	SHIELD
SHLDR	SHOULDERED
SKT	SOCKET
SL	SLIDE
SLFLKG	SELF-LOCKING
SLVG	SLEEVING
SPR	SPRING
SQ	SQUARE
SST	STAINLESS STEEL
STL	STEEL
SW	SWITCH
T	TUBE
TERM	TERMINAL
THD	THREAD
THK	THICK
TNSN	TENSION
TPG	TAPPING
TRH	TRUSS HEAD
V	VOLTAGE
VAR	VARIABLE
W/	WITH
WSHR	WASHER
XFMR	TRANSFORMER
XSTR	TRANSISTOR

http://manoman.sqhill.com

CROSS INDEX MFR. CODE NUMBER TO MANUFACTURER

MFR.CODE	MANUFACTURER	ADDRESS	CITY,STATE,ZIP
0000C	GETTIG ENGINEERING AND MANUFACTURING CO.		SPRINGMILL, PA 16875
00779	AMP, INC.	P. O. BOX 3608	HARRISBURG, PA 17105
01295	TEXAS INSTRUMENTS, INC., SEMICONDUCTOR GROUP	P. O. BOX 5012	DALLAS, TX 75222
01881	ANCONDA AMERICAN BRASS CO., A DIV. OF ANACONDA CO.	414 MEADOW ST.	WATERBURY, CT 06720
04426	ILLINOIS TOOL WORKS, INC., LICON DIV.	6615 W. IRVING PARK BlVD.	CHICAGO, IL 60634
05820	WAKEFIELD ENGINEERING, INC.	AUDUBON ROAD	WAKEFIELD, MA 01880
06515	AERO CRAFT AND MISSLE PRODUCTS	16300-D EAST ARROW HWY	IRWINDALE, CA 91706
06540	AMATOM ELECTRONIC HARDWARE, DIV. OF MITE CORP.	446 BlAKE ST.	NEW HAVEN, CT 06515
06982	MOORE, HOWARD J., CO.	105 E. 16TH ST.	NEW YORK, NY 10003
08261	SPECTRA-STRIP CORP.	7100 LAMPSON AVE.	GARDEN GROVE, CA 92642
12327	FREEWAY CORP.	9301 ALLEN DR.	CLEVELAND, OH 44125
12360	ALBANY PRODUCTS CO., DIV. OF PNEUMO DYNAMICS CORP.	351 CONNECTICUT AVE.	SOUTH NORWALK, CT 06856
16428	BELDEN CORP.	P. O. BOX 1101	RICHMOND, IN 47374
22526	BERG ELECTRONICS, INC.	YOUK EXPRESSWAY	NEW CUMBERLAND, PA 17070
22753	U. I. D. ELECTRONICS CORP.	4105 PEMBROKE RD.	HOLLYWOOD, FL 33021
23050	PRODUCT COMPONENTS CORP	30 LORRAINE AVE.	MT VERNON, NY 10553
23499	GAVITT WIRE AND CABLE, DIVISION OF RSC INDUSTRIES, INC.	455 N. QUINCE ST.	ESCONDIDO, CA 92025
24931	SPECIALTY CONNECTOR CO., INC.	3560 MADISON AVE.	INDIANAPOLIS, IN 46227
26365	GRIES REPRODUCER CO., DIV. OF COATS AND CLARK INC.	125 BEECHWOOD AVE.	NEW ROCHELLE, NY 10802
28520	HEYMAN MFG. CO.	147 N. MICHIGAN AVE.	KENILWORTH, NJ 07033
28875	IMC MAGNETICS CORP., NEW HAMPSHIRE DIV.	ROUTE 16	ROCHESTER, NH 03867
70276	ALLEN MFG. CO.	P. O. DRAWER 570	HARTFORD, CT 06101
71279	CAMBRIDGE THERMIONIC CORP.	445 CONCORD AVE.	CAMBRIDGE, MA 02138
71590	CENTRALAB ELECTRONICS, DIV. OF GLOBE-UNION, INC.	5757 N. GREEN BAY AVE.	MILWAUKEE, WI 53201
71785	TRW ELECTRONIC COMPONENTS, CINCH CONNECTOR OPERATIONS	1501 MORSE AVE.	ELK GROVE VILLAGE, IL 60007
72653	G. C. ELECTRONICS CO., A DIVISION OF HYDROMETALS, INC.	400 S. WYMAN ST.	ROCKFORD, IL 61101
73743	FISCHER SPECIAL MFG. CO.	446 MORGAN ST.	CINCINNATI, OH 45206
74445	HOLO-KROME CO.	31 BROOK ST. WEST	HARTFORD, CT 06110
74921	ITEN FIBRE CO., THE	4001 BENEFIT AVE.	ASHTABULA, OH 44004
75915	LITTELFUSE, INC.	800 E. NORTHWEST HWY	DES PLAINES, IL 60016
77250	PHEOLL MANUFACTURING CO., DIVISION OF ALLIED PRODUCTS CORP.	5700 W. ROOSEVELT RD.	CHICAGO, IL 60650
77342	AMF, INC., POTTER AND BRUMFIELD DIV.	1200 E. BROADWAY	PRINCETON, IN 47570
78189	ILLINOIS TOOL WORKS, INC. SHAKEPROOF DIVISION	ST. CHARLES ROAD	ELGIN, IL 60120
79727	C-W INDUSTRIES	550 DAVISVILLE RD.	WARMINSTER, PA 18974
79807	WROUGHT WASHER MFG. CO.	2100 S. O BAY ST.	MILWAUKEE, WI 53207
80009	TEKTRONIX, INC.	P. O. BOX 500	BEAVERTON, OR 97077
83385	CENTRAL SCREW CO.	2530 CRESCENT DR.	BROADVIEW, IL 60153
83501	GAVITT WIRE AND CABLE, DIVISION OF RSC INDUSTRIES, INC.	CENTRAL ST.	BROOKFIELD, MA 01506
86445	PENN FIBRE AND SPECIALTY CO., INC.	2032 E. WESTMORELAND ST.	PHILADELPHIA, PA 19134
95987	WECKESSER CO., INC.	4444 WEST IRVING PARK RD.	CHICAGO, IL 60641

http://manoman.sqhill.com

Fig. & Index No.	Tektronix Part No.	Serial/Model No. Eff	Dscont	Qty	1 2 3 4 5 Name & Description	Mfr Code	Mfr Part Number
1-1	366-1480-02			1	PUSH BUTTON:	80009	366-1480-02
-2	366-1402-02			2	PUSH BUTTON:LEFT	80009	366-1402-02
-3	366-1402-03			1	PUSH BUTTON:ALT	80009	366-1402-03
-4	366-1402-04			1	PUSH BUTTON:ADD	80009	366-1402-04
-5	366-1257-31			1	PUSH BUTTON:CHOP	80009	366-1257-31
-6	366-1402-06			2	PUSH BUTTON:RIGHT	80009	366-1402-06
-7	366-1402-07			1	PUSH BUTTON:VERT MODE	80009	366-1402-07
-8	366-1402-18			2	PUSH BUTTON:STORE	80009	366-1402-18
-9	366-1402-22			2	PUSH BUTTON:ENHANCE	80009	366-1402-22
-10	366-1402-23			2	PUSH BUTTON:AUTO ERASE	80009	366-1402-23
-11	366-1257-84			2	PUSH BUTTON:GRAY--ERASE	80009	366-1257-84
-12	136-0387-01			1	JACK,TIP:BLACK	71279	4352-1-0310
-13	136-0387-00			3	JACK,TIP:GRAY	71279	4352-1-0318
-14	426-0681-00			17	FR,PUSH BUTTON:GRAY PLASTIC	80009	426-0681-00
-15	366-1059-00			3	PUSH BUTTON:GRAY	80009	366-1059-00
-16	366-1215-00			3	KNOB:GRAY	80009	366-1215-00
	----- -----			-	. EACH KNOB INCLUDES:		
	213-0153-00			1	. SETSCREW:5-40 X 0.125 INCH,HEX SOC STL	74445	OBD
-17	366-1391-00			1	KNOB:GRAY	80009	366-1391-00
	----- -----			-	. KNOB INCLUDES:		
	213-0140-00			1	. SETSCREWCH,HEX SOC STL	70276	OBD
-18	366-1077-00			1	KNOB:GRAY	80009	366-1077-00
	----- -----			-	. KNOB INCLUDES:		
	213-0153-00			1	. SETSCREW:5-40 X 0.125 INCH,HEX SOC STL	74445	OBD
-19	358-0378-00	B010100	B169999	1	BUSHING,SLEEVE:PRESS MOUNT	80009	358-0378-00
-20	----- -----			3	RESISTOR,VAR:		
					(ATTACHING PARTS FOR EACH)		
-21	210-0583-00			1	NUT,PLAIN,HEX.:0.25-32 X 0.312 INCH,BRS	73743	2X20224-402
-22	210-0940-00			1	WASHER,FLAT:0.25 ID X 0.375 INCH OD,STL	79807	OBD
-23	210-0223-01			1	TERMINAL,LUG:0.25 INCH DIA,SE,60 DEG BEND	78189	210-14-07-2520N
					- - - * - - -		
-24	----- -----			1	RESISTOR,VAR:		
					(ATTACHING PARTS)		
-25	210-0583-00			1	NUT,PLAIN,HEX.:0.25-32 X 0.312 INCH,BRS	73743	2X20224-402
	210-0940-00			1	WASHER,FLAT:0.25 ID X 0.375 INCH OD,STL	79807	OBD
					- - - * - - -		
-26	333-1617-00	B010100	B169999	1	PANEL,FRONT:	80009	333-1617-00
	333-1617-01	B170000		1	PANEL FRONT:	80009	333-1617-01
-27	----- -----	B010100	B169999	1	RESISTOR,VAR:		
					(ATTACHING PARTS)		
-28	358-0409-00	B010100	B169999	1	BSHG,MACH.THD:0.25-32 X 0.159 ID X 0.24	80009	358-0409-00
	210-1026-00	B010100	B169999	1	WASHER,LOCK:EXTERNAL,0.25INCH DIAMETER	78189	1114-00-00-0541C
-29	210-0471-00	B010100	B169999	1	NUT,SLEEVE:HEX.,0.312 X 0.594 INCH LONG	80009	210-0471-00
					- - - * - - -		
-30	----- -----			1	CKT BOARD ASSY:CALIBRATOR(SEE A8 EPL)		
					(ATTACHING PARTS)		
-31	211-0101-00			2	SCREW,MACHINE:4-40 X 0.25" 100 DEG,FLH STL	83385	OBD
					- - - * - - -		
	----- -----			-	. CKT BOARD ASSY INCLUDES:		
-32	211-0008-00			2	. SCREW,MACHINE:4-40 X 0.25 INCH,PNH STL	83385	OBD
-33	220-0651-00			2	. NUT,BLOCK:4-40 X 0.25 SQUARE X 0.45" LONG	80009	220-0651-00
-34	131-0608-00			48	. CONTACT,ELEC:0.365 INCH LONG	22526	47357
-35	136-0252-04	B010100	B070999	12	. CONTACT,ELEC:0.188 INCH LONG	22526	75060
	136-0350-00	B071000		4	. SOCKET,PLUG-IN:3 PIN,LOW PROFILE	80009	136-0350-00
	131-0993-00	XB191673		1	. LINK,TERM.CONNE:2 WIRE BLACK	00779	530153-2
-36	260-1378-00			1	. SWITCH,PUSH:VERT MODE	71590	2KBC140000-608
-37	260-1379-00			1	. SWITCH,PUSH:TRIG SOURCE	71590	2KBC120000-595
-38	361-0411-00			12	. SPACER,PUSH SW:0.13 W X 0.375 INCH L,PLSTC	71590	J64285-00
-39	384-1136-00			7	EXTENSION SHAFT:0.95 INCH LONG	80009	384-1136-00
-40	----- -----			1	CKT BOARD ASSY:STORAGE SWITCH(SEE A14 EPL)		
					(ATTACHING PARTS)		
-41	211-0101-00			2	SCREW,MACHINE:4-40 X 0.25" 100 DEG,FLH STL	83385	OBD
					- - - * - - -		

http://manoman.sqhill.com

Fig. & Index No.	Tektronix Part No.	Serial/Model No. Eff	Dscont	Qty	1 2 3 4 5 Name & Description	Mfr Code	Mfr Part Number
1-	----- -----			-	. CKT BOARD ASSY INCLUDES:		
-42	211-0008-00			2	. SCREW,MACHINE:4-40 X 0.25 INCH,PNH STL	83385	OBD
-43	220-0651-00			2	. NUT,BLOCK:4-40 X 0.25 SQUARE X 0.45" LONG	80009	220-0651-00
	131-0608-00			29	. CONTACT,ELEC:0.365 INCH LONG	22526	47357
-44	136-0252-04	B010100	B070999	37	. CONTACT,ELEC:0.188 INCH LONG	22526	75060
	136-0252-04	B071000	B221809	28	. CONTACT,ELEC:0.188 INCH LONG	22526	75060
	136-0269-02	B221810		2	. SOCKET,PLUG-IN:14 CONTACT,LOW CLEARANCE	01295	C931402
	136-0350-00	B071000		3	. SOCKET,PLUG-IN:3 PIN,LOW PROFILE	80009	136-0350-00
-45	260-1443-00			1	. SWITCH,PUSH:	80009	260-1443-00
-46	260-1444-00			1	. SWITCH,PUSH:	80009	260-1444-00
-47	361-0411-00			24	. SPACER,PUSH SW:0.13 W X 0.375 INCH L,PLSTC	71590	J64285-00
-48	386-2322-00			1	SUBPANEL,FRONT:	80009	386-2322-00
					(ATTACHING PARTS)		
-49	213-0068-00			2	SCR,TPG,THD CTG:4-40 X 0.50 INCH,PNL STL	83385	OBD
	211-0589-00			4	SCREW,MACHINE:6-32 X 0.312 INCH,PNH BRS	83385	OBD
					- - - * - - -		
-50	351-0295-00			3	GUIDE,SLIDE:	80009	351-0295-00
					(ATTACHING PARTS FOR EACH)		
-51	213-0034-00			1	SCR,TPG,THD CTG:4-40 X 0.188 INCH,PNH STL	83385	OBD
					- - - * - - -		
-52	348-0278-00			1	SHLD GSKT,ELEC:	80009	348-0278-00
-53	426-0514-00			1	FRAME,MASK:PLASTIC	80009	426-0514-00
-54	378-0625-00			1	FILTER,LT,CRT:	80009	378-0625-00
-55	331-0258-03			1	MASK,CRT SCALE:	80009	331-0258-03
-56	200-0939-01			1	BEZEL,CRT:	80009	200-0939-01
					(ATTACHING PARTS)		
-57	212-0023-00			4	SCREW,MACHINE:8-32 X 0.375 INCH,PNH STL	83385	OBD
	131-1022-00	XB170000		2	CONTACT,ELEC:CRT MASK	80009	131-1022-00
					- - - * - - -		
-58	337-1159-00			1	WINDOW,OBS:4.78 X 3.93 X 0.07"PLSTC	80009	337-1159-00
-59	333-1691-00			1	PANEL,FRONT:LEFT	80009	333-1691-00
-60	----- -----	B010100	B169999	2	CKT BOARD ASSY:GRATICULE LIGHT(SEE A13 EPL)		
	----- -----			-	. EACH CKT BOARD ASSY INCLUDES:		
-61	378-0614-00	B010100	B169999	1	. REFLECTOR,LIGHT:MOLDED PLASTIC	80009	378-0614-00
-62	344-0179-00	B010100	B169999	2	. CLIP,REFL RTNG:PLASTIC	80009	344-0179-00
-63	211-0062-00	B010100	B169999	2	. SCREW,MACHINE:2-56 X 0.312 INCH,RDH STL	83385	OBD
-64	348-0031-00	B010100	B169999	2	GROMMET,PLASTIC:0.156 INCH DIA	80009	348-0031-00
-65	204-0380-00			1	BODY,TERMINAL:	80009	204-0380-00
-66	131-0765-00			3	CONTACT,ELEC:	80009	131-0765-00
-67	386-1884-03			1	SPRT,ELCTRN TUB:	80009	386-1884-03
					(ATTACHING PARTS)		
-68	212-0040-00			3	SCREW,MACHINE:8-32 X 0.375 100 DEG,FLH STL	83385	OBD
					- - - * - - -		
	----- -----			-	. SUPPORT INCLUDES:		
-69	386-1517-00			4	. SUPPORT,CRT:	80009	386-1517-00
-70	348-0074-00			2	SPT PIVOT,FLIP:RIGHT FRONT AND LEFT REAR	80009	348-0074-00
					(ATTACHING PARTS FOR EACH)		
-71	211-0532-00			2	SCREW,MACHINE:6-32 X 0.75 INCH,FILH STL	83385	OBD
					- - - * - - -		
-72	348-0073-00			2	SPT PIVOT,FLIP:LEFT FRONT AND RIGHT REAR	80009	348-0073-00
					(ATTACHING PARTS FOR EACH)		
-73	211-0532-00			2	SCREW,MACHINE:6-32 X 0.75 INCH,FILH STL	83385	OBD
					- - - * - - -		
-74	377-0119-00			4	PAD,CUSHIONING:	80009	377-0119-00
-75	348-0282-00			1	STAND,ELEC EQPT:	80009	348-0282-00
-76	343-0256-00			2	RTNR BLK,SCOPE:	80009	343-0256-00
					(ATTACHING PARTS FOR EACH)		
-77	211-0578-00			2	SCREW,MACHINE:6-32 X 0.438 1NCH,PNH STL	83385	OBD
					- - - * - - -		
-78	390-0204-00			1	COVER,SCOPE:	80009	390-0204-00
					(ATTACHING PARTS)		
-79	211-0503-00			4	SCREW,MACHINE:6-32 X 0.188 INCH,PNH STL	83385	OBD
					- - - * - - -		

http://manoman.sqhill.com

Fig. & Index No.	Tektronix Part No.	Serial/Model No. Eff	Dscont	Qty	1 2 3 4 5 Name & Description	Mfr Code	Mfr Part Number
1-80	390-0306-00			2	COVER,SCOPE:	80009	390-0306-00
	----- -----			-	. EACH CABINET INCLUDES:		
-81	214-0603-01			1	. PIN,SECURING:0.27 INCH LONG	80009	214-0603-01
-82	214-0604-00			1	. WASH.,SPG TNSN:0.26 ID X 0.47 INCH OD	80009	214-0604-00
-83	386-0227-00			1	. PL,LATCH INDEX:	80009	386-0227-00
-84	386-1151-00			1	. PLATE,LATCH LKG:	80009	386-1151-00
-85	384-1058-00			1	EXTENSION SHAFT:8.157 INCH LONG	80009	384-1058-00
-86	210-0202-00			1	TERMINAL,LUG:SE #6	78189	2104-06-00-2520N
					(ATTACHING PARTS)		
-87	211-0559-00	XB160000		1	SCREW,MACHINE:6-32 X 0.375"100 DEG,FLH STL	83385	OBD
-88	210-0457-00	XB160000		1	NUT,PLAIN,EXT W:6-32 X 0.312 INCH,STL	83385	OBD
					- - - * - - -		
	644-0437-01	B010100	B159999	1	POWER SW ASSY:	80009	644-0437-01
	644-0056-00	B160000		1	POWER SW ASSY:	80009	644-0056-00
					(ATTACHING PARTS)		
-89	211-0559-00			2	SCREW,MACHINE:6-32 X 0.375"100 DEG,FLH STL	83385	OBD
-90	210-0457-00			2	NUT,PLAIN,EXT W:6-32 X 0.312 INCH,STL	83385	OBD
					- - - * - - -		
	211-0101-00	B010100	B159999X	2	. SCREW,MACHINE:4-40 X 0.25" 100 DEG,FLH STL	83385	OBD
	210-0586-00	B010100	B159999X	2	. NUT,PLAIN,EXT W:4-40 X 0.25 INCH,STL	78189	OBD
-91	337-1760-00	B010100	B159999	1	. SHIELD,ELEC:POWER SWITCH	80009	337-1760-00
	200-1731-00	B160000		1	. COVER,ELEC,SW:1.9 X 1.0 INCH	80009	200-1731-00
					(ATTACHING PARTS)		
-92	211-0021-00	B010100	B159999	1	. SCREW,MACHINE:4-40 X 1.25 INCH,PNH STL	83385	OBD
	211-0034-00	B160000		1	. SCREW,MACHINE:2-56 X 0.500 INCH,PNH,STL	77250	OBD
-93	220-0665-00	B010100	B159999	1	. NUT,PLAIN,HEX.:SLFLKG,4-40 X0.25",PLSTC	23050	NOTE
	210-0405-00	B160000		1	. NUT,PLAIN,HEX.:2-56 X 0.188 INCH,BRS	73743	2X12157-402
-94	210-0850-00	XB160000		1	. WASHER,FLAT:0.093 ID X 0.281 OD	12327	OBD
					- - - * - - -		
-95	260-1368-01	B010100	B159999	1	. SWITCH,PUSH:SPST,15A,250VAC	04426	23-1542
	260-1709-00	B160000		1	. SWITCH PUSH:POWER	77342	A9T5 762-6-3
					(ATTACHING PARTS)		
-96	211-0008-00	XB160000		2	. SCREW,MACHINE:4-40 X 0.25 INCH,PNH STL	83385	OBD
					- - - * - - -		
-97	407-1570-00	XB160000		1	. BRACKET,ANGLE:POWER SWITCH	80009	407-1570-00
	214-1226-01	B010100	B159999X	1	. SPRING,HLCPS:0.18 OD X 0.44 INCH LONG	80009	214-1226-01
	214-1689-00	B010100	B159999X	1	. ACTUATOR,SW:	80009	214-1689-00
	200-1318-00	B010100	B159999X	1	. COVER,SW ACTR:	80009	200-1318-00
-98	200-0728-00			1	COV,HANDLE END:	80009	200-0728-00
-99	367-0108-00			1	HANDLE,SCOPE:	80009	367-0108-00
					(ATTACHING PARTS)		
-100	212-0597-00			4	SCREW,MACHINE:10-32 X 0.50 INCH,STL	80009	212-0597-00
-101	386-1624-00			2	PL,RET.,HANDLE:	80009	386-1624-00
-102	358-0485-00			4	BUSHING,SLEEVE:0.196ID X 0.287OD X 0.13" L	80009	358-0485-00
-103	386-1283-03			2	PLATE,HDL MTG:PLASTIC	80009	386-1283-03
					- - - * - - -		
-104	343-0006-00			1	CLAMP,LOOP:0.50 INCH DIAMETER,PLSTC	95987	1-2-6B
					(ATTACHING PARTS)		
-105	211-0538-00			1	SCREW,MACHINE:6-32 X 0.312"100 DEG,FLH STL	83385	OBD
-106	210-0863-00			1	WSHR,LOOP CLAMP:FOR 0.50" WIDE CLAMP,STL	95987	C191
-107	210-0457-00			1	NUT,PLAIN,EXT W:6-32 X 0.312 INCH,STL	83385	OBD
					- - - * - - -		
-108	343-0004-00			1	CLAMP,LOOP:0.312 INCH DIAMETER,PLSTC	95987	5-16-6B
					(ATTACHING PARTS)		
-109	211-0538-00			1	SCREW,MACHINE:6-32 X 0.312"100 DEG,FLH STL	83385	OBD
-110	210-0863-00			1	WSHR,LOOP CLAMP:FOR 0.50" WIDE CLAMP,STL	95987	C191
-111	210-0457-00			1	NUT,PLAIN,EXT W:6-32 X 0.312 INCH,STL	83385	OBD
					- - - * - - -		
-112	131-1018-00			4	CONTACT,ELEC:PLUG-IN GROUND	80009	131-1018-00
					(ATTACHING PARTS FOR EACH)		
-113	211-0008-00			1	SCREW,MACHINE:4-40 X 0.25 INCH,PNH STL	83385	OBD
-114	210-0586-00			1	NUT,PLAIN,EXT W:4-40 X 0.25 INCH,STL	78189	OBD
					- - - * - - -		

http://manoman.sqhill.com

Fig. & Index No.	Tektronix Part No.	Serial/Model No. Eff	Dscont	Qty	1 2 3 4 5 Name & Description	Mfr Code	Mfr Part Number
1-115	131-0930-00			2	CONTACT,ELEC:PLUG-IN GROUND	80009	131-0930-00
					(ATTACHING PARTS FOR EACH)		
-116	211-0008-00			1	SCREW,MACHINE:4-40 X 0.25 INCH,PNH STL	83385	OBD
-117	210-0586-00			1	NUT,PLAIN,EXT W:4-40 X 0.25 INCH,STL	78189	OBD
					- - - * - - -		
-118	131-0799-00			2	CONTACT,ELEC:	80009	131-0799-00
					(ATTACHING PARTS FOR EACH)		
-119	211-0008-00			1	SCREW,MACHINE:4-40 X 0.25 INCH,PNH STL	83385	OBD
-120	210-0586-00			1	NUT,PLAIN,EXT W:4-40 X 0.25 INCH,STL	78189	OBD
					- - - * - - -		
-121	----- -----			1	CKT BOARD ASSY:LOGIC(SEE A2 EPL)		
	----- -----			-	. CKT BOARD ASSY INCLUDES:		
-122	131-0566-00			1	. LINK,TERM.CONNE:0.086 DIA X 2.375 INCH L	0000C	L-2007-1
-123	136-0235-00			1	. SOCKET,PLUG-IN:6 CONTACT,ROUND	71785	133-96-12-062
-124	136-0252-04	B010100	B070999	24	. CONTACT,ELEC:0.188 INCH LONG	22526	75060
-125	136-0350-00	B071000		8	. SOCKET,PLUG-IN:3 PIN,LOW PROFILE	80009	136-0350-00
-126	136-0263-03			33	. CONTACT,ELEC:FOR 0.025 INCH SQUARE PIN	00779	86250-2
-127	136-0260-02			1	. SOCKET,PLUG-IN:16 CONTACT,LOW CLEARANCE	01295	C931602
-128	136-0269-02			3	. SOCKET,PLUG-IN:14 CONTACT,LOW CLEARANCE	01295	C931402
-129	214-0579-00			4	. TERM.,TEST PT:0.40 INCH LONG	80009	214-0579-00
-130	----- -----			1	CKT BOARD ASSY:MAIN INTERFACE(SEE A1 EPL)		
					(ATTACHING PARTS)		
-131	213-0034-00			9	SCR,TPG,THD CTG:4-40 X 0.188 INCH,PNH STL	83385	OBD
					- - - * - - -		
	----- -----			-	. CKT BOARD ASSY INCLUDES:		
-132	131-0608-00			85	. CONTACT,ELEC:0.365 INCH LONG	22526	47357
	131-0591-00			32	. CONTACT,ELEC:0.835 INCH LONG	22526	47352
	131-0592-00			26	. CONTACT,ELEC:0.885 INCH LONG	22526	47353
-133	131-0804-00			1	. LINK,TERM.CONNE:J-SHAPE	80009	131-0804-00
-134	129-0308-00			4	. POST,ELEC-MECH:HEX.,0.25 X 0.465 INCH LONG	80009	129-0308-00
					(ATTACHING PARTS FOR EACH)		
-135	211-0008-00			1	. SCREW,MACHINE:4-40 X 0.25 INCH,PNH STL	83385	OBD
					- - - * - - -		
-136	131-0805-00			2	. LINK,TERM.CONNE:J-SHAPE,0.90X0.82 X 0.312"	80009	131-0805-00
-137	131-1003-00			2	. CONNECTOR BODY,:CKT BD MT,3 PRONG	80009	131-1003-00
-138	136-0252-01	B010100	B141393	2	. CONTACT,ELEC:0.178 INCH LONG	00779	1-332095-2
	136-0252-04	B141394		2	. CONTACT,ELEC:0.188 INCH LONG	22526	75060
-139	214-1568-00			2	. PIN,GUIDE:	80009	214-1568-00
					(ATTACHING PARTS FOR EACH)		
-140	210-0406-00			1	. NUT,PLAIN,HEX.:4-40 X 0.188 INCH,BRS	73743	2X12161-402
-141	210-0054-00			1	. WASHER,LOCK:SPLIT,0.118 ID X 0.212"OD STL	83385	OBD
-142	344-0147-00			1	. CLIP,SPR,TNSN:CIRCUIT BOARDMOUNTING	80009	344-0147-00
					- - - * - - -		
-143	670-1374-00			1	. CKT BOARD ASSY:--VERT INTERCONNECT	80009	670-1374-00
					(ATTACHING PARTS)		
-144	211-0008-00			2	. SCREW,MACHINE:4-40 X 0.25 INCH,PNH STL	83385	OBD
-145	351-0213-00			2	. GUIDE-POST,LOCK:0.285 INCH LONG	80009	351-0213-00
					- - - * - - -		
	----- -----			-	. . CKT BOARD ASSY INCLUDES:		
-146	131-0787-00			8	. . CONTACT,ELEC:0.64 INCH LONG	22526	47359
-147	386-1558-00			2	. SPACER,CKT BD:PLASTIC	80009	386-1558-00
	131-0767-00	B010100	B029999	1	. CONNECTOR,RCPT,:76 CONTACT	80009	131-0767-00
	131-0767-07	B030000		1	. CONNECTOR,RCPT,:PLUG-IN CKT BD,70 CONTACT	80009	131-0767-07
					(ATTACHING PARTS)		
-148	213-0232-00			2	. SCR,TPG,THD FOR:2-32 X 0.312 INCH,PNH STL	83385	OBD
-149	210-0906-00			1	. WASHER,NONMETAL:FIBER,0.125 ID X 0.203"OD	86445	OBD
					- - - * - - -		
	----- -----			-	. . CONNECTOR INCLUDES:		
-150	200-0950-00			2	. . COVER,ELEC CONN:PLASTIC	80009	200-0950-00
-151	131-0726-00	B010100	B029999	38	. . CONTACT,ELEC:STRAIGHT	80009	131-0726-00
	131-0726-00	B030000		35	. . CONTACT,ELEC:STRAIGHT	80009	131-0726-00
-152	131-0727-00	B010100	B029999	38	. . CONTACT,ELEC:OFFSET	80009	131-0727-00
	131-0727-00	B030000		35	. . CONTACT,ELEC:OFFSET	80009	131-0727-00

http://manoman.sqhill.com

Fig. & Index No.	Tektronix Part No.	Serial/Model No. Eff	Dscont	Qty	1 2 3 4 5 Name & Description	Mfr Code	Mfr Part Number
1-153	204-0365-02			1	. . BODY CONNECTOR:PLUG-IN CIRCUIT BOARD	80009	204-0365-02
	131-0767-02	B010100	B029999	2	. CONNECTOR,RCPT,:76 CONTACT	80009	131-0767-02
	131-0767-08	B030000		2	. CONNECTOR,RCPT,:PLUG-IN CKT BD,70 CONTACT	80009	131-0767-08
					(ATTACHING PARTS FOR EACH)		
-154	213-0232-00			2	. SCR,TPG,THD FOR:2-32 X 0.312 INCH,PNH STL	83385	OBD
					- - - * - - -		
	----- -----			-	. . EACH CONNECTOR INCLUDES:		
-155	200-0950-00			2	. . COVER,ELEC CONN:PLASTIC	80009	200-0950-00
-156	131-0726-00	B010100	B029999	36	. . CONTACT,ELEC:STRAIGHT	80009	131-0726-00
	131-0726-00	B030000		33	. . CONTACT,ELEC:STRAIGHT	80009	131-0726-00
-157	131-0727-00	B010100	B029999	36	. . CONTACT,ELEC:OFFSET	80009	131-0727-00
	131-0727-00	B030000		33	. . CONTACT,ELEC:OFFSET	80009	131-0727-00
-158	131-0899-00			4	. . CONTACT,ELEC:0.048 X 0.006 INCH THK	80009	131-0899-00
-159	204-0365-00			1	. . BODY,CONNECTOR:PLUG-IN CIRCUIT BOARD	80009	204-0365-00
-160	----- -----			1	CKT BOARD ASSY:VERTICAL INTERFACE(SEE A4 EPL)		
					(ATTACHING PARTS)		
-161	211-0008-00			2	SCREW,MACHINE:4-40 X 0.25 INCH,PNH STL	83385	OBD
					- - - * - - -		
	----- -----			-	. CKT BOARD ASSY INCLUDES:		
-162	136-0252-04	B010100	B070999	15	. CONTACT,ELEC:0.188 INCH LONG	22526	75060
	136-0252-04	B070999	B071000	6	. CONTACT,ELEC:0.188 INCH LONG	22526	75060
	136-0350-00	B071000		3	. SOCKET,PLUG-IN:3 PIN,LOW PROFILE	80009	136-0350-00
-163	136-0260-02			1	. SOCKET,PLUG-IN:16 CONTACT,LOW CLEARANCE	01295	C931602
-164	136-0263-03			18	. CONTACT,ELEC:FOR 0.025 INCH SQUARE PIN	00779	86250-2
-165	----- -----			1	CKT BOARD ASSY:TRIGGER SELECTOR(SEE A3 EPL)		
					(ATTACHING PARTS)		
-166	211-0008-00			2	SCREW,MACHINE:4-40 X 0.25 INCH,PNH STL	83385	OBD
					- - - * - - -		
	----- -----			-	. CKT BOARD ASSY INCLUDES:		
-167	131-0589-00			4	. CONTACT,ELEC:0.46 INCH LONG	22526	47350
-168	136-0252-04	B010100	B070999	15	. CONTACT,ELEC:0.188 INCH LONG	22526	75060
	136-0350-00	B071000		5	. SOCKET,PLUG-IN:3 PIN,LOW PROFILE	80009	136-0350-00
-169	136-0260-01			1	. SOCKET,PLUG-IN:16 CONTACT,RECT SHAPE	71785	133-51-02-075
-170	136-0263-03			16	. CONTACT,ELEC:FOR 0.025 INCH SQUARE PIN	00779	86250-2
-171	407-1145-01			1	BRKT,HEAT SINK:LEFT	80009	407-1145-01
					(ATTACHING PARTS)		
-172	211-0538-00			2	SCREW,MACHINE:6-32 X 0.312"100 DEG,FLH STL	83385	OBD
					- - - * - - -		
-173	407-1145-02			1	BRKT,HEAT SINK:RIGHT	80009	407-1145-02
					(ATTACHING PARTS)		
-174	211-0538-00			2	SCREW,MACHINE:6-32 X 0.312"100 DEG,FLH STL	83385	OBD
					- - - * - - -		
	426-1042-00			1	FRAME ASSEMBLY:	80009	426-1042-00
	----- -----			-	. FRAME ASSEMBLY INCLUDES:		
-175	426-0741-06			1	. FRAME SECT,CAB.:FRONT	80009	426-0741-06
					(ATTACHING PARTS)		
-176	210-0782-00			8	. RIVET,SOLID:0.125 OD X 0.312"100 DEG FLH	12360	OBD
					- - - * - - -		
-177	426-0741-03			1	. FRAME SECT,CAB.:REAR	80009	426-0741-03
					(ATTACHING PARTS)		
-178	210-0782-00			8	. RIVET,SOLID:0.125 OD X 0.312"100 DEG FLH	12360	OBD
					- - - * - - -		
-179	426-0753-00			1	. FRAME SECT,CAB.:TOP CENTER	80009	426-0753-00
-180	380-0238-00			1	. HOUSING,PLUG-IN:	80009	380-0238-00
					(ATTACHING PARTS)		
-181	210-0782-00			2	. RIVET,SOLID:0.125 OD X 0.312"100 DEG FLH	12360	OBD
					- - - * - - -		
-182	426-0857-00			1	. FRAME SECT,CAB.:LOWER RIGHT	80009	426-0857-00
-183	426-0858-00			1	. FRAME SECT,CAB.:LOWER LEFT	80009	426-0858-00

http://manoman.sqhill.com

Fig. & Index No.	Tektronix Part No.	Serial/Model No. Eff	Dscont	Qty	1 2 3 4 5 Name & Description	Mfr Code	Mfr Part Number
2-1	407-1001-00			1	BRKT,CRT SHIELD:	80009	407-1001-00
					(ATTACHING PARTS)		
-2	211-0589-00			2	SCREW,MACHINE:6-32 X 0.312 INCH,PNH BRS	83385	OBD
-3	210-0457-00			2	NUT,PLAIN,EXT W:6-32 X 0.312 INCH,STL	83385	OBD
	211-0538-00			2	SCREW,MACHINE:6-32 X 0.312"100 DEG,FLH STL	83385	OBD
					- - - * - - -		
-4	348-0031-00			1	GROMMET,PLASTIC:0.156 INCH DIA	80009	348-0031-00
-5	348-0063-00			2	GROMMET,PLASTIC:0.50 INCH DIA	80009	348-0063-00
-6	348-0067-00			1	GROMMET,PLASTIC:0.312 INCH DIA	80009	348-0067-00
	672-0572-00	XB220000		1	CKT BOARD ASSY:PROTECTION AND READOUT	80009	672-0572-00
-7	----- -----			1	. CKT BOARD ASSY:PROTECTION(SEE A17 EPL)		
-8	253-0162-00	XB220000		FT	. . TAPE,PRESS SENS:	04963	OBD
-9	131-058900	XB220000		20	. . CONTACT,ELEC:0.46 INCH LONG	22526	47350
-10	210-070200	XB220000		1	. EYELET,METALLIC:0.046 OD X 0.125 INCH LONG	07707	26127
-11	----- -----			1	. CKT BOARD ASSY:READOUT(SEE A16 EPL)		
					(ATTACHING PARTS)		
-12	211-0008-00			1	. SCREW,MACHINE:4-40 X 0.25 INCH,PNH STL	83385	OBD
					- - - * - - -		
	----- -----			-	. . CKT BOARD ASSY INCLUDES:		
-13	131-0608-00			42	. . CONTACT,ELEC:0.365 INCH LONG	22526	47357
-14	131-1003-00			6	. . CONNECTOR BODY,:CKT BD MT,3 PRONG	80009	131-1003-00
-15	136-0252-04	B010100	B111154	45	. . CONTACT,ELEC:0.188 INCH LONG	22526	75060
	136-0220-00	B111155		13	. . SOCKET,PLUG-IN:3 PIN,SQUARE	71785	133-23-11-034
-16	136-0260-01			14	. . SOCKET,PLUG-IN:16 CONTACT,RECT SHAPE	71785	133-51-02-075
-17	136-0269-00			3	. . SOCKET,PLUG-IN:14 CONTACT,LOW CLEARANCE	71785	133-59-02-073
-18	136-0235-00			1	. . SOCKET,PLUG-IN:6 CONTACT,ROUND	71785	133-96-12-062
-19	260-0723-00			1	. . SWITCH,SLIDE:DPDT,0.5A,125VAC	79727	GF126-0028
-20	214-0579-00	B010100	B221999	19	. . TERM.,TEST PT:0.40 INCH LONG	80009	214-0579-00
	214-0579-00	B220000		20	. . TERM.,TEST PT:0.40 INCH LONG	80009	214-0579-00
-21	351-0324-00			2	GUIDE,CKT CARD:	80009	351-0324-00
-22	441-1080-00			1	CHASSIS,SCOPE:READOUT	80009	441-1080-00
					(ATTACHING PARTS)		
-23	211-0147-00			4	SCREW,MACHINE:4-40 X 0.25 INCH,PNH STL	83385	OBD
-24	220-0665-00			4	NUT,PLAIN,HEX.:SLFLKG,4-40 X0.25",PLSTC	23050	OBD
					- - - * - - -		
-25	119-0371-00			1	DELAY LINE,ELEC:	80009	119-0371-00
					(ATTACHING PARTS)		
-26	213-0034-00			2	SCR,TPG,THD CTG:4-40 X 0.188 INCH,PNH STL	83385	OBD
					- - - * - - -		
-27	----- -----			1	CKT BOARD ASSY:VERTICAL AMP(SEE A5 EPL)		
					(ATTACHING PARTS)		
-28	211-0008-00			4	SCREW,MACHINE:4-40 X 0.25 INCH,PNH STL	83385	OBD
					- - - * - - -		
	----- -----			-	. CKT BOARD ASSY INCLUDES:		
-29	131-0589-00			8	. CONTACT,ELEC:0.46 INCH LONG	22526	47350
-30	131-0608-00			1	. CONTACT,ELEC:0.365 INCH LONG	22526	47357
-31	131-1003-00			1	. CONNECTOR BODY,:CKT BD MT,3 PRONG	80009	131-1003-00
-32	136-0252-04	B010100	B070999	27	. CONTACT,ELEC:0.188 INCH LONG	22526	75060
	136-0350-00	B071000		9	. SOCKET,PLUG-IN:3 PIN,LOW PROFILE	80009	136-0350-00
-33	214-0579-00			1	. TERM.,TEST PT:0.40 INCH LONG	80009	214-0579-00
-34	----- -----			1	CKT BOARD ASSY:HORIZONTAL AMP(SEE A6 EPL)		
					(ATTACHING PARTS)		
-35	211-0008-00			2	SCREW,MACHINE:4-40 X 0.25 INCH,PNH STL	83385	OBD
					- - - * - - -		
	----- -----			-	. CKT BOARD ASSY INCLUDES:		
-36	131-0589-00			24	. CONTACT,ELEC:0.46 INCH LONG	22526	47350
-37	131-0608-00			2	. CONTACT,ELEC:0.365 INCH LONG	22526	47357
-38	136-0252-04	B010100	B070999	37	. CONTACT,ELEC:0.188 INCH LONG	22526	75060
	136-0252-04	B071000	B221809	6	. CONTACT,ELEC:0.188 INCH LONG	22526	75060
	136-0260-00	B221810		1	. SOCKET,PLUG-IN:16 CONTACT,RECT SHAPE	71785	133-51-92-008
	136-0350-00	B071000		3	. SOCKET,PLUG-IN:3 PIN,LOW PROFILE	80009	136-0350-00
	136-0365-00	B071000		4	. SOCKET,PLUG-IN:3 PIN	80009	136-0365-00
-39	214-1292-00			4	. HEAT SINK,ELEC:TRANSISTOR	05820	205-AB
-40	214-0579-00			1	. TERM.,TEST PT:0.40 INCH LONG	80009	214-0579-00

http://manoman.sqhill.com

Fig. & Index No.	Tektronix Part No.	Serial/Model No. Eff	Dscont	Qty	1 2 3 4 5 Name & Description	Mfr Code	Mfr Part Number
2-41	441-1081-01			1	CHAS,ELEC EQUIP:MAIN	80009	441-1081-01
					(ATTACHING PARTS)		
-42	211-0510-00			2	SCREW,MACHINE:6-32 X 0.312 INCH,PNH STL	83385	OBD
-43	210-0993-00			2	WSHR,SHOULDERED:0.143" ID X 0.75" OD,BRS	79807	OBD
-44	210-0457-00			1	NUT,PLAIN,EXT W:6-32 X 0.312 INCH,STL	83385	OBD
-45	211-0507-00			1	SCREW,MACHINE:6-32 X 0.312 INCH,PNH STL	83385	OBD
					- - - * - - -		
	----- -----			-	. CHASSIS ASSY INCLUDES:		
-46	351-0324-00			1	. GUIDE,CKT CARD:	80009	351-0324-00
-47	407-1136-00			1	. BRKT,COIL MTG:	80009	407-1136-00
					(ATTACHING PARTS)		
-48	211-0012-00			2	. SCREW,MACHINE:4-40 X 0.375 INCH,PNH STL	83385	OBD
-49	210-0201-00			2	. TERMINAL,LUG:SE #4	78189	2104-04-00-2520N
-50	210-0586-00			2	. NUT,PLAIN,EXT W:4-40 X 0.25 INCH,STL	78189	OBD
					- - - * - - -		
-51	343-0205-01			1	. RTNR,ELECTRON T:	80009	343-0205-01
					(ATTACHING PARTS)		
-52	211-0507-00			4	. SCREW,MACHINE:6-32 X 0.312 INCH,PNH STL	83385	OBD
					- - - * - - -		
-53	354-0347-00			1	. RING,CLP,CRT RE:	80009	354-0347-00
					(ATTACHING PARTS)		
-54	211-0170-00			2	. SCREW,MACHINE:4-40 X 2.75 INCH,PNH STL	83385	OBD
-55	214-1333-00			2	. SPRING,HLCPS:0.213 OD X 0.375 INCH LONG	80009	214-1333-00
					- - - * - - -		
	210-0627-00			2	RIVET,SOLID:0.042 DIA X 0.25 INCH,RDH	80009	210-0627-00
-56	343-0097-00			2	RTNR,TRANSISTOR:HEAT SINK	80009	343-0097-00
					(ATTACHING PARTS FOR EACH)		
-57	210-0599-00			2	NUT,SLEEVE:4-40 X 0.391 INCH LONG	80009	210-0599-00
-58	214-0368-00			1	SPRING,HLCPS:0.24 DIA X 0.438 INCH LONG	80009	214-0368-00
					- - - * - - -		
-59	352-0062-00			2	HOLDER,HEAT SK:1.187 X 1.187 INCHES,PLSTC	80009	352-0062-00
					(ATTACHING PARTS FOR EACH)		
-60	211-0008-00			2	SCREW,MACHINE:4-40 X 0.25 INCH,PNH STL	83385	OBD
-61	211-0012-00			2	SCREW,MACHINE:4-40 X 0.375 INCH,PNH STL	83385	OBD
-62	210-0406-00			4	NUT,PLAIN,HEX.:4-40 X 0.188 INCH,BRS	73743	2X12161-402
					- - - * - - -		
-63	337-1679-00			1	SHLD,ELCTRN TUB:	80009	337-1679-00
-64	----- -----			2	COIL:		
					(ATTACHING PARTS FOR EACH)		
-65	211-0504-00			1	SCREW,MACHINE:6-32 X 0.25 INCH,PNH STL	83385	OBD
					- - - * - - -		
	210-0457-00			2	NUT,PLAIN,EXT W:6-32 X 0.312 INCH,STL	83385	OBD
	211-0590-00			2	SCREW,MACHINE:6-32 X 0.25 INCH,PNH STL	83385	OBD
-66	----- -----			1	CKT BOARD ASSY:STORAGE(SEE A15 EPL)		
					(ATTACHING PARTS)		
-67	211-0008-00			4	SCREW,MACHINE:4-40 X 0.25 INCH,PNH STL	83385	OBD
					- - - * - - -		
	----- -----			-	. CKT BOARD ASSY INCLUDES:		
-68	131-0589-00			33	. CONTACT,ELEC:0.46 INCH LONG	22526	47350
-69	136-0252-04	B010100	B070999	51	. CONTACT,ELEC:0.188 INCH LONG	22526	75060
	136-0252-04	B071000		12	. CONTACT,ELEC:0.188 INCH LONG	22526	75060
	136-0350-00	B071000		13	. SOCKET,PLUG-IN:3 PIN,LOW PROFILE	80009	136-0350-00
-70	214-0579-00			5	. TERM.,TEST PT:0.40 INCH LONG	80009	214-0579-00
	200-1904-00	XB200000		4	. COVER,XSTR:	80009	
	621-0467-00			1	POWER SUPPLY:HIGH VOLTAGE	80009	621-0467-00
					(ATTACHING PARTS)		
-71	211-0504-00			3	SCREW,MACHINE:6-32 X 0.25 INCH,PNH STL	83385	OBD
					- - - * - - -		
	----- -----			-	. HIGH VOLTAGE ASSY INCLUDES:		
-72	----- -----			1	. CKT BOARD ASSY:Z AXIS(SEE A10 EPL)		
					(ATTACHING PARTS)		
-73	211-0008-00			3	. SCREW,MACHINE:4-40 X 0.25 INCH,PNH STL	83385	OBD
					- - - * - - -		

http://manoman.sqhill.com

Fig. & Index No.	Tektronix Part No.	Serial/Model No. Eff	Dscont	Qty	1 2 3 4 5 Name & Description	Mfr Code	Mfr Part Number
2-	----- -----			-	. . CKT BOARD ASSY INCLUDES:		
-74	131-1589-00			45	. . CONTACT,ELEC:0.46 INCH LONG	22526	47350
-75	136-0252-04			21	. . CONTACT,ELEC:0.188 INCH LONG	22526	75060
-76	344-0154-00			4	. . CLIP,ELECTRICAL:FOR 0.25 INCH DIA FUSE	80009	344-0154-00
-77	----- -----			1	. CKT BOARD ASSY:HIGH VOLTAGE(SEE A9 EPL)		
					(ATTACHING PARTS)		
-78	211-0008-00			6	. SCREW,MACHINE:4-40 X 0.25 INCH,PNH STL	83385	OBD
-79	220-0449-00			2	. NUT,SLEEVE:4-40 X 0.188 X 0.50" LONG	80009	220-0449-00
-80	211-0040-00			2	. SCREW,MACHINE:4-40 X 0.25",BDCH PLSTC	26365	OBD
-81	384-0536-00			2	. SPACER,SLEEVE:4-40 X 0.25 X0.531" LONG	80009	384-0536-00
					- - - * - - -		
	----- -----			-	. . CKT BOARD ASSY INCLUDES:		
-82	129-0072-00			1	. . INSULATOR,STDF:0.938 INCH LONG	80009	129-0072-00
-83	131-0589-00			5	. . CONTACT,ELEC:0.46 INCH LONG	22526	47350
	131-0608-00			17	. . CONTACT,ELEC:0.365 INCH LONG	22526	47357
-84	136-0252-04	B010100	B070999	24	. . CONTACT,ELEC:0.188 INCH LONG	22526	75060
	136-0350-00	B071000		4	. . SOCKET,PLUG-IN:3 PIN,LOW PROFILE	80009	136-0350-00
	136-0365-00	B071000		4	. . SOCKET,PLUG-IN:3 PIN	80009	136-0365-00
-85	214-0579-00			1	. . TERM.,TEST PT:0.40 INCH LONG	80009	214-0579-00
-86	----- -----			1	. TRANSISTOR:		
					(ATTACHING PARTS)		
-87	213-0146-00			2	. SCR,TPG,THD FOR:6-20 X 0.313 INCH,PNH STL	83385	OBD
-88	386-0978-00			1	. INSULATOR,PLATE:0.002 INCH MICA,FOR TO-3	80009	386-0978-00
					- - - * - - -		
-89	136-0280-00			1	. SOCKET,PLUG-IN:FOR TO-3	22753	PTS1
					(ATTACHING PARTS)		
-90	211-0101-00			2	. SCREW,MACHINE:4-40 X 0.25" 100 DEG,FLH STL	83385	OBD
-91	210-0586-00			2	. NUT,PLAIN,EXT W:4-40 X 0.25 INCH,STL	78189	OBD
					- - - * - - -		
-92	348-0012-00			1	. GROMMET,RUBBER:	72653	1043-1M
-93	255-0334-00			1	. PLASTIC CHANNEL:12.75 INCHES LONG	80009	255-0334-00
	136-0509-00	B010100	B129999	1	. SOCKET,PLUG-IN:	80009	136-0509-00
	136-0509-01	B130000		1	. SOCKET,PLUG-IN:	80009	136-0509-01
	----- -----			-	. . SOCKET ASSY INCLUDES:		
-94	343-0235-00			1	. . CLAMP,SOCKET:	80009	343-0235-00
-95	367-0117-00			1	. . PULL,SOC,PL-IN:	80009	367-0117-00
-96	200-0917-01			1	. . COV,ELECTRON TU:2.052 OD X 0.291" THK,PLSTC	80009	200-0917-01
-97	136-0304-02			1	. . SOCKET,PLUG-IN:CRT,14 PIN SOCKET,W/PINS	80009	136-0304-02
	131-0707-00			5	. . CONTACT,ELEC:0.48"L,22-26 AWG WIRE	22526	47439
	131-0621-00			5	. . CONTACT,ELEC:0.577"L,22-26 AWG WIRE	22526	46231
	352-0162-04			1	. . CONN BODY,PL,EL:4 WIRE YELLOW	80009	352-0162-04
	352-0202-05			1	. . CONN BODY,PL,EL:4 WIRE GREEN	80009	352-0202-05
-98	337-1680-00			1	. SHEILD,ELEC:POWER SUPPLY	80009	337-1680-00
-99	337-1425-00			1	SHIELD,ELEC:	80009	337-1425-00
					(ATTACHING PARTS)		
-100	211-0516-00			4	SCREW,MACHINE:6-32 X 0.875 INCH,PNH STL	83385	OBD
					- - - * - - -		
-101	----- -----			6	TRANSISTOR:		
					(ATTACHING PARTS FOR EACH)		
-102	211-0511-00			2	SCREW,MACHINE:6-32 X 0.50 INCH,PNH STL	83385	OBD
-103	386-0978-00			1	INSULATOR,PLATE:0.002 INCH MICA,FOR TO-3	80009	386-0978-00
					- - - * - - -		
-104	441-1060-01			1	CHAS,ELEC EQPT:MAIN	80009	441-1060-01
					(ATTACHING PARTS)		
	211-0538-00			4	SCREW,MACHINE:6-32 X 0.312"100 DEG,FLH STL	83385	OBD
					- - - * - - -		
-105	----- -----			1	CKT BOARD ASSY:REGULATOR(SEE A12 EPL)		
	----- -----			-	. CKT BOARD ASSY INCLUDES:		
-106	131-0608-00			49	. CONTACT,ELEC:0.365 INCH LONG	22526	47357
-107	136-0183-00			3	. SOCKET,PLUG-IN:3 PIN,ROUND	80009	136-0183-00
-108	136-0235-00			6	. SOCKET,PLUG-IN:6 CONTACT,ROUND	71785	133-96-12-062
-109	136-0252-04	B010100	B070999	36	. CONTACT,ELEC:0.188 INCH LONG	22526	75060
	136-0252-04	B071000		9	. CONTACT,ELEC:0.188 INCH LONG	22526	75060
	136-0350-00	B071000		9	. SOCKET,PLUG-IN:3 PIN,LOW PROFILE	80009	136-0350-00

http://manoman.sqhill.com

Fig. & Index No.	Tektronix Part No.	Serial/Model No. Eff	Dscont	Qty	1 2 3 4 5 Name & Description	Mfr Code	Mfr Part Number
2-110	136-0269-02			1	. SOCKET,PLUG-IN:14 CONTACT,LOW CLEARANCE	01295	C931402
-111	136-0361-00			6	. SOCKET,PLUG-IN:	80009	136-0361-00
-112	136-0384-00			12	. CONTACT,ELEC:FOR 0.04 DIAMETER PIN	00779	52120
-113	131-0847-00			12	. TERMINAL STUD:6-32 X 0.435 INCH LONG	80009	131-0847-00
-114	214-1291-00			3	. HEAT SINK,ELEC:XSTR,0.72 OD X 0.375"H	05820	207-AB
-115	344-0154-00			2	. CLIP,ELECTRICAL:FOR 0.25 INCH DIA FUSE	80009	344-0154-00
-116	386-2416-00			1	SUPPORT,CHASSIS:	80009	386-2416-00
					(ATTACHING PARTS)		
	211-0538-00			2	SCREW,MACHINE:6-32 X 0.312"100 DEG,FLH STL	83385	OBD
	210-0457-00			2	NUT,PLAIN,EXT W:6-32 X 0.312 INCH,STL	83385	OBD
					- - - * - - -		
-117	407-1002-00			1	BRACKET,CHASSIS:	80009	407-1002-00
					(ATTACHING PARTS)		
	211-0541-00			4	SCREW,MACHINE:6-32 X 0.25"100 DEG,FLH STL	83385	OBD
	210-0457-00			4	NUT,PLAIN,EXT W:6-32 X 0.312 INCH,STL	83385	OBD
					- - - * - - -		
	614-0104-00	B010100	B191672	1	SUBPANEL ASSY:REAR	80009	614-0104-00
	614-0104-03	B191673		1	SUBPANEL ASSY:REAR	80009	614-0104-03
					(ATTACHING PARTS)		
-118	211-0529-00			4	SCREW,MACHINE:6-32 X 1.25 INCHES,PNH STL	83385	OBD
-119	348-0191-00			4	LEG,ELEC EQUIP.:PLASTIC	80009	348-0191-00
					- - - * - - -		
	----- -----			-	. SUBPANEL ASSY INCLUDES:		
-120	352-0076-00			1	. FUSEHOLDER:W/HARDWARE	75915	342012
-121	200-1388-00	B010100	B191672	1	. COVER,FUSE:	80009	200-1388-00
	200-1388-01	B191673		1	. COVER,FUSE:	80009	200-1388-01
-122	131-0955-00			6	. CONNECTOR,RCPT,:BNC,FEMALE	24931	28JR200-1
					(ATTACHING PARTS FOR EACH)		
-123	210-0255-00			1	. TERMINAL,LUG:0.391" ID INT TOOTH	80009	210-0255-00
					- - - * - - -		
-124	210-0202-00	B010100	B191672	1	. TERMINAL,LUG:SE #6	78189	2104-06-00-2520N
	210-0202-00	B191673		2	. TERMINAL,LUG:SE #6	78189	2104-06-00-2520N
					(ATTACHING PARTS)		
-125	211-0504-00	B010100	B191672	1	. SCREW,MACHINE:6-32 X 0.25 INCH,PNH STL	83385	OBD
	211-0507-00	B191673		1	. SCREW,MACHINE:6-32 X 0.312 INCH,PNH STL	83385	OBD
-126	210-0407-00	B010100	B191672	1	. NUT,PLAIN,HEX.:6-32 X 0.25 INCH,BRS	73743	3038-0228-402
	210-0407-00	B191673		2	. NUT,PLAIN,HEX.:6-32 X 0.25 INCH,BRS	73743	3038-0228-402
					- - - * - - -		
-127	161-0033-09			1	. CABLE ASSY,PWR:3 WIRE,92 INCH LONG	16428	KH8035
-128	358-0323-00			1	. BSHG,STRAIN RLF:90 DEG,0.515 DIA HOLE	28520	SR15-1
-129	210-0201-00			1	. TERMINAL,LUG:SE #4	78189	2104-04-00-2520N
					(ATTACHING PARTS)		
-130	211-0008-00			2	. SCREW,MACHINE:4-40 X 0.25 INCH,PNH STL	83385	OBD
-131	385-0149-00			1	. INS,STANDOFF:4-40 X 0.25 INCH DIAMETER	80009	385-0149-00
					- - - * - - -		
-132	----- -----			1	. CKT BOARD ASSY:OUTPUT SIGNALS(SEE A7 EPL)		
					(ATTACHING PARTS)		
-133	211-0008-00			2	. SCREW,MACHINE:4-40 X 0.25 INCH,PNH STL	83385	OBD
					- - - * - - -		
	----- -----			-	. . CKT BOARD ASSY INCLUDES:		
-134	131-0608-00			11	. . CONTACT,ELEC:0.365 INCH LONG	22526	47357
-135	131-1003-00			2	. . CONNECTOR BODY,:CKT BD MT,3 PRONG	80009	131-1003-00
-136	136-0252-04	B010100	B070999	27	. . CONTACT,ELEC:0.188 INCH LONG	22526	75060
	136-0350-00	B071000		9	. . SOCKET,PLUG-IN:3 PIN,LOW PROFILE	80009	136-0350-00
	136-0252-01			2	. . CONTACT,ELEC:0.178 INCH LONG	00779	1-332095-2
-137	260-0984-00			1	. . SWITCH,SLIDE:DP3POSN,0.5A,125VAC-DC	79727	G-128SPC/7140
-138	214-0579-00			1	. . TERM.,TEST PT:0.40 INCH LONG	80009	214-0579-00
-139	386-2199-00			1	. PANEL,REAR:POWER	80009	386-2199-00
	614-0077-05			1	POWER SUPPLY:LOW VOLTAGE	80009	614-0077-05
					(ATTACHING PARTS)		
	212-0040-00			6	SCREW,MACHINE:8-32 X 0.375 100 DEG,FLH STL	83385	OBD
					- - - * - - -		

http://manoman.sqhill.com

Fig. & Index No.	Tektronix Part No.	Serial/Model No. Eff	Dscont	Qty	1 2 3 4 5 Name & Description	Mfr Code	Mfr Part Number
2-	----- -----			-	. POWER SUPPLY INCLUDES:		
-140	----- -----			1	. CKT BOARD ASSY:RECTIFIER(SEE A11 EPL)		
					(ATTACHING PARTS)		
-141	211-0507-00			2	. SCREW,MACHINE:6-32 X 0.312 INCH,PNH STL	83385	OBD
-142	210-0202-00			1	. TERMINAL,LUG:SE #6	78189	2104-06-00-2520N
-143	211-0511-00			2	. SCREW,MACHINE:6-32 X 0.50 INCH,PNH STL	83385	OBD
-144	343-0004-00			1	. CLAMP,LOOP:0.312 INCH DIAMETER,PLSTC	95987	5-16-6B
-145	210-0863-00			1	. WSHR,LOOP CLAMP:FOR 0.50" WIDE CLAMP,STL	95987	C191
	211-0008-00	XB030365		1	. SCREW,MACHINE:4-40 X 0.25 INCH,PNH STL	83385	OBD
					- - - * - - -		
	----- -----			-	. . CKT BOARD ASSY INCLUDES:		
-146	131-0608-00			31	. . CONTACT,ELEC:0.365 INCH LONG	22526	47357
-147	136-0252-04	B010100	B070999	6	. . CONTACT,ELEC:0.188 INCH LONG	22526	75060
	136-0350-00	B071000		2	. . SOCKET,PLUG-IN:3 PIN,LOW PROFILE	80009	136-0350-00
-148	214-1292-00			2	. . HEAT SINK,ELEC:TRANSISTOR	05820	205-AB
-149	214-1731-00	B010100	B030364	1	. . HEAT SINK,ELEC:TRANSISTOR	80009	214-1731-00
	214-1731-01	B030365		1	. . HEAT SINK,ELEC:TRANSISTOR:TRANSISTOR	80009	214-1731-01
					(ATTACHING PARTS)		
-150	211-0012-00			1	. . SCREW,MACHINE:4-40 X 0.375 INCH,PNH STL	83385	OBD
-151	210-0935-00			1	. . WASHER,NONMETAL:FIBER,0.14 IDX 0.375"OD	74921	OBD
-152	210-0586-00			1	. . NUT,PLAIN,EXT W:4-40 X 0.25 INCH,STL	78189	OBD
					- - - * - - -		
-153	344-0154-00			4	. . CLIP,ELECTRICAL:FOR 0.25 INCH DIA FUSE	80009	344-0154-00
-154	----- -----			1	. TRANSFORMER:		
					(ATTACHING PARTS)		
-155	212-0522-00			2	. SCREW,MACHINE:10-32 X 2.50",HEX HD STL	83385	OBD
-156	210-0812-00			2	. WASHER,NONMETAL:#10,FIBER	06982	OBD
-157	166-0457-00			2	. INSUL SLVG,ELEC:0.19 ID X 1.875"LONG MYLAR	80009	166-0457-00
-158	212-0023-00			2	. SCREW,MACHINE:8-32 X 0.375 INCH,PNH STL	83385	OBD
-159	210-0804-00			2	. WASHER,FLAT:0.17 ID X 0.375 INCH OD,STL	12327	OBD
-160	407-0921-00			1	. BRKT,XFMR MTG:	80009	407-0921-00
					- - - * - - -		
-161	----- -----			1	. SW,THERMOSTATIC:(SEE S1000 EPL)		
					(ATTACHING PARTS)		
-162	211-0008-00			2	. SCREW,MACHINE:4-40 X 0.25 INCH,PNH STL	83385	OBD
-163	210-0586-00			2	. NUT,PLAIN,EXT W:4-40 X 0.25 INCH,STL	78189	OBD
					- - - * - - -		
-164	441-0993-01			1	. CHAS,ELEK EQPT:	80009	441-0993-01
-165	179-1637-00			1	. WIRING HARNESS,:POWER	80009	179-1637-00
	----- -----			-	. . WIRING HARNESS INCLUDES:		
-166	200-1075-00			4	. . COVER,ELEC CONN:PLASTIC	00779	1-480435-0
-167	131-0861-00			4	. . CONTACT,ELEC:QUICK DISCONNECT	00779	42617-2
	195-0114-00			1	LEAD SET:READOUT	80009	195-0114-00
	----- -----			-	. LEAD SET INCLUDES:		
	131-0707-00			80	. CONTACT,ELEC:0.48"L,22-26 AWG WIRE	22526	47439
	210-0774-00			5	. EYELET,METALLIC:0.152 OD X 0.245 INCH L,BRS	80009	210-0774-00
	210-0775-00			5	. EYELET,METALLIC:0.126 OD X 0.23 INCH L,BRS	80009	210-0775-00
	175-0828-00			FT	. WIRE,ELECTRICAL:5 WIRE RIBBON	23499	TEK-175-0828-00
	175-0833-00			FT	. WIRE,ELECTRICAL:10 WIRE RIBBON	23499	TEK-175-0833-00
	352-0163-01			2	. CONN BODY,PL,EL:5 WIRE BROWN	80009	352-0163-01
	352-0163-06			2	. CONN BODY,PL,EL:5 WIRE BLUE	80009	352-0163-06
	352-0163-08			2	. CONN BODY,PL,EL:5 WIRE GRAY	80009	352-0163-08
	352-0168-05			2	. CONN BODY,PL,EL:10 WIRE GREEN	80009	352-0168-05
	352-0168-07			2	. CONN BODY,PL,EL:10 WIRE VIOLET	80009	352-0168-07
	352-0169-09			2	. CONN BODY,PL,EL:2 WIRE WHITE	80009	352-0169-09
-168	179-1825-00			1	WIRING HARNESS,:VERTICAL SIGNAL	80009	179-1825-00
-169	131-0707-00			2	. CONTACT,ELEC:0.48"L,22-26 AWG WIRE	22526	47439
	131-0708-00			2	. CONTACT,ELEC:0.48"L,28-32 AWG WIRE	22526	47437
-170	210-0774-00			2	. EYELET,METALLIC:0.152 OD X 0.245 INCH L,BRS	80009	210-0774-00
-171	210-0775-00			2	. EYELET,METALLIC:0.126 OD X 0.23 INCH L,BRS	80009	210-0775-00
	352-0162-09			1	. CONN BODY,PL,EL:4 WIRE WHITE	80009	352-0162-09
	179-1826-00			1	WIRING HARNESS,:SWEEP GATE	80009	179-1826-00
	131-0707-00			8	. CONTACT,ELEC:0.48"L,22-26 AWG WIRE	22526	47439

http://manoman.sqhill.com

Fig. & Index No.	Tektronix Part No.	Serial/Model No. Eff	Dscont	Qty	1 2 3 4 5 Name & Description	Mfr Code	Mfr Part Number
2-	131-0708-00			8	. CONTACT,ELEC:0.48"L,28-32 AWG WIRE	22526	47437
	352-0166-03			2	. CONN BODY,PL,EL:8 WIRE ORANGE	80009	352-0166-03
	179-1852-00			1	WIRING HARNESS,:INSET	80009	179-1852-00
	131-0707-00			3	. CONTACT,ELEC:0.48"L,22-26 AWG WIRE	22526	47439
	131-0708-00			1	. CONTACT,ELEC:0.48"L,28-32 AWG WIRE	22526	47437
	352-0169-00			1	. CONN BODY,PL,EL:2 WIRE BLACK	80009	352-0169-00
	352-0169-05			1	. CONN BODY,PL,EL:2 WIRE,GREEN	80009	352-0169-05
-172	131-0472-01			4	CONTACT,ELEC:FEMALE	80009	131-0472-01
-173	131-0621-00			5	CONTACT,ELEC:0.577"L,22-26 AWG WIRE	22526	46231
	131-0707-00	B010100	B169999	390	CONTACT,ELEC:0.48"L,22-26 AWG WIRE	22526	47439
	131-0707-00	B170000	B191672	379	CONTACT,ELEC:0.48"L,22-26 AWG WIRE	22526	47439
	131-0707-00	B191673		377	CONTACT,ELEC:0.48"L,22-56 AWG WIRE	22526	47439
	131-0708-00			28	CONTACT,ELEC:0.48"L,28-32 AWG WIRE	22526	47437
	131-0861-00			4	CONTACT,ELEC:QUICK DISCONNECT	00779	42617-2
	210-0774-00			7	EYELET,METALLIC:0.152 OD X 0.245 INCH L,BRS	80009	210-0774-00
	210-0775-00			7	EYELET,METALLIC:0.126 OD X 0.23 INCH L,BRS	80009	210-0775-00
-174	175-0825-00			FT	WIRE,ELECTRICAL:2 WIRE RIBBON	23499	TEK-175-0825-00
-175	175-0826-00			FT	WIRE,ELECTRICAL:3 WIRE RIBBON	08261	TEK-175-0826-00
-176	175-0827-00			FT	WIRE,ELECTRICAL:4 WIRE RIBBON	08261	TEK-175-0827-00
-177	175-0828-00			FT	WIRE,ELECTRICAL:5 WIRE RIBBON	23499	TEK-175-0828-00
-178	175-0829-00			FT	WIRE,ELECTRICAL:6 WIRE RIBBON	83501	TEK-175-0829-00
-179	175-0830-00			FT	WIRE,ELECTRICAL:7 WIRE RIBBON	08261	TEK-175-0830-00
-180	175-0831-00			FT	WIRE,ELECTRICAL:8 WIRE RIBBON	08261	TEK-175-0831-00
-181	175-0833-00			FT	WIRE,ELECTRICAL:10 WIRE RIBBON	23499	TEK-175-0833-00
	175-0855-00			FT	WIRE,ELECTRICAL:10 WIRE RIBBON	23499	TEK-175-0855-00
	175-0857-00			FT	WIRE,ELECTRICAL:8 WIRE RIBBON	23499	TEK-175-0857-00
-182	352-0171-00			7	CONN BODY,PL,EL:1 WIRE BLACK	80009	352-0171-00
	352-0171-03			4	CONN BODY,PL,EL:1 WIRE ORANGE	80009	352-0171-03
-183	352-0169-00	B010100	B191672	4	CONN BODY,PL,EL:2 WIRE BLACK	80009	352-0169-00
	352-0169-00	B191673		3	CONN BODY,PL,EL:2 WIRE BLACK	80009	352-0169-00
	352-0169-01	B010100	B169999	6	CONN BODY,PL,EL:2 WIRE BROWN	80009	352-0169-01
	352-0169-01	B170000		5	CONN BODY,PL,EL:2 WIRE BROWN	80009	352-0169-01
	352-0169-04			1	CONN BODY,PL,EL:2 WIRE YELLOW	80009	352-0169-04
	352-0169-06			1	CONN BODY,PL,EL:2 WIRE BLUE	80009	352-0169-06
	352-0169-08			2	CONN BODY,PL,EL:2 WIRE GRAY	80009	352-0169-08
	352-0169-09			2	CONN BODY,PL,EL:2 WIRE WHITE	80009	352-0169-09
-184	352-0161-00			3	CONN BODY,PL,EL:3 WIRE BLACK	80009	352-0161-00
	352-0161-02			1	CONN BODY,PL,EL:3 WIRE RED	80009	352-0161-02
	352-0161-03			1	CONN BODY,PL,EL:3 WIRE ORANGE	80009	352-0161-03
	352-0161-05	B010100	B169999X	1	CONN BODY,PL,EL:3 WIRE GREEN	80009	352-0161-05
	352-0161-08			1	CONN BODY,PL,EL:3 WIRE GRAY	80009	352-0161-08
-185	352-0162-01	B010100	B169999	4	CONN BODY,PL,EL:4 WIRE BROWN	80009	352-0162-01
	352-0162-01	B170000		2	CONN BODY,PL,EL:4 WIRE BROWN	80009	352-0162-01
	352-0162-04			1	CONN BODY,PL,EL:4 WIRE YELLOW	80009	352-0162-04
	352-0162-05			1	CONN BODY,PL,EL:4 WIRE GREEN	80009	352-0162-05
	352-0162-09			1	CONN BODY,PL,EL:4 WIRE WHITE	80009	352-0162-09
-186	352-0163-00			4	CONN BODY,PL,EL:5 WIRE BLACK	80009	352-0163-00
	352-0163-01			2	CONN BODY,PL,EL:5 WIRE BROWN	80009	352-0163-01
	352-0163-02			2	CONN BODY,PL,EL:5 WIRE RED	80009	352-0163-02
	352-0163-03			1	CONN BODY,PL,EL:5 WIRE ORANGE	80009	352-0163-03
	352-0163-06			2	CONN BODY,PL,EL:5 WIRE BLUE	80009	352-0163-06
	352-0163-08			2	CONN BODY,PL,EL:5 WIRE GRAY	80009	352-0163-08
-187	352-0164-00			2	CONN BODY,PL,EL:6 WIRE BLACK	80009	352-0164-00
	352-0164-01			2	CONN BODY,PL,EL:6 WIRE BROWN	80009	352-0164-01
	352-0164-06			2	CONN BODY,PL,EL:6 WIRE BLUE	80009	352-0164-06
	352-0164-07			1	CONN BODY,PL,EL:6 WIRE VIOLET	80009	352-0164-07
	352-0164-08			1	CONN BODY,PL,EL:GRAY	80009	352-0164-08
-188	352-0166-00			4	CONN BODY,PL,EL:8 WIRE BLACK	80009	352-0166-00
	352-0166-01			3	CONN BODY,PL,EL:8 WIRE BROWN	80009	352-0166-01
	352-0166-02			1	CONN BODY,PL,EL:8 WIRE RED	80009	352-0166-02
-189	352-0168-00			2	CONN BODY,PL,EL:10 WIRE BLACK	80009	352-0168-00
	352-0168-05			2	CONN BODY,PL,EL:10 WIRE GREEN	80009	352-0168-05
	352-0168-07			2	CONN BODY,PL,EL:10 WIRE VIOLET	80009	352-0168-07

http://manoman.sqhill.com

Fig. & Index No.	Tektronix Part No.	Serial/Model No. Eff	Dscont	Qty	1 2 3 4 5 Name & Description	Mfr Code	Mfr Part Number
3-1	390-0229-00			1	CABINET TOP:OSCILLOSCOPE	80009	390-0229-00
					(ATTACHING PARTS)		
-2	211-0008-00			6	SCREW,MACHINE:4-40 X 0.25 INCH,PNH STL	83385	OBD
					- - - * - - -		
-3	366-1480-02			1	PUSHBUTTON:POWER	80009	366-1480-02
-4	366-1402-02			2	PUSH BUTTON:LEFT	80009	366-1402-02
-5	366-1402-03			1	PUSH BUTTON:ALT	80009	366-1402-03
-6	366-1402-04			1	PUSH BUTTON:ADD	80009	366-1402-04
-7	366-1257-31			1	PUSH BUTTON:CHOP	80009	366-1257-31
-8	366-1402-06			2	PUSH BUTTON:RIGHT	80009	366-1402-06
-9	366-1402-07			1	PUSH BUTTON:VERT MODE	80009	366-1402-07
-10	366-1402-18			2	PUSH BUTTON:STORE	80009	366-1402-18
-11	366-1402-22			2	PUSH BUTTON:ENHANCE	80009	366-1402-22
-12	366-1402-23			2	PUSH BUTTON:AUTO ERASE	80009	366-1402-23
-13	366-1257-84			2	PUSH BUTTON:GRAY--ERASE	80009	366-1257-84
-14	136-0387-01			1	JACK,TIP:BLACK	71279	4352-1-0310
-15	136-0387-00			3	JACK,TIP:GRAY	71279	4352-1-0318
-16	426-0681-00			17	FR,PUSH BUTTON:GRAY PLASTIC	80009	426-0681-00
-17	366-1059-00			3	PUSH BUTTON:GRAY	80009	366-1059-00
-18	366-1215-00			3	KNOB:GRAY	80009	366-1215-00
	----- -----			-	. EACH KNOB INCLUDES:		
	213-0153-00			1	. SETSCREW:5-40 X 0.125 INCH,HEX SOC STL	74445	OBD
-19	366-1391-00			1	KNOB:GRAY	80009	366-1391-00
	----- -----			-	. KNOB INCLUDES:		
	213-0140-00			1	. SETSCREW:2-56 X 0.094 INCH,HEX SOC,STL	70276	OBD
-20	366-1077-00			1	KNOB:GRAY	80009	366-1077-00
	----- -----			-	. KNOB INCLUDES:		
	213-0153-00			1	. SETSCREW:5-40 X 0.125 INCH,HEX SOC STL	74445	OBD
-21	358-0378-00	B010100	B169999X	1	BUSHING,SLEEVE:PRESS MOUNT	80009	358-0378-00
-22	----- -----			3	RES.,VAR:		
					(ATTACHING PARTS FOR EACH)		
-23	210-0583-00			1	NUT,PLAIN,HEX.:0.25-32 X 0.312 INCH,BRS	73743	2X20319-402
-24	210-0940-00			1	WASHER,FLAT:0.25 ID X 0.375 INCH OD,STL	79807	OBD
-25	210-0223-01			1	TERMINAL,LUG:0.25 INCH DIA,SE,60 DEG BEND	78189	210-14-07-2520N
					- - - * - - -		
-26	----- -----			1	RES.,VAR:		
					(ATTACHING PARTS)		
-27	210-0583-00			1	NUT,PLAIN,HEX.:0.25-32 X 0.312 INCH,BRS	73743	2X20319-402
	210-0940-00			1	WASHER,FLAT:0.25 ID X 0.375 INCH OD,STL	79807	OBD
					- - - * - - -		
-28	333-1617-00	B010100	B169999	1	PANEL,FRONT:	80009	333-1617-00
	333-1617-01	B170000		1	PANEL,FRONT:	80009	333-1617-01
-29	----- -----	B010100	B169999X	1	RES.,VAR:		
					(ATTACHING PARTS)		
-30	358-0409-00	B010100	B169999X	1	BSHG,MACH.THD:0.25-32 X 0.159 ID X 0.24	80009	358-0409-00
	210-1026-00	B010100	B169999X	1	WASHER,LOCK:EXTERNAL,0.25INCH DIAMETER	78189	1114-00-00-0541C
-31	210-0471-00	B010100	B169999X	1	NUT,SLEEVE:HEX.,0.312 X 0.594 INCH LONG	80009	210-0471-00
					- - - * - - -		
-32	----- -----			1	CKT BOARD ASSY:CALIBRATOR(SEE A8 EPL)		
					(ATTACHING PARTS)		
-33	211-0101-00			2	SCREW,MACHINE:4-40 X 0.25" 100 DEG,FLH STL	83385	OBD
					- - - * - - -		
	----- -----			-	. CKT BOARD ASSY INCLUDES:		
-34	211-0008-00			2	. SCREW,MACHINE:4-40 X 0.25 INCH,PNH STL	83385	OBD
-35	220-0651-00			2	. NUT,BLOCK:4-40 X 0.25 SQUARE X 0.45" LONG	80009	220-0651-00
-36	131-0608-00			48	. CONTACT,ELEC:0.365 INCH LONG	22526	47357
-37	136-0252-04			12	. CONTACT,ELEC:0.188 INCH LONG	22526	75060
-38	260-1378-00			1	. SWITCH,PUSH:VERT MODE	71590	2KBC140000-608
-39	260-1379-00			1	. SWITCH,PUSH:TRIG SOURCE	71590	2KBC120000-595
-40	361-0411-00			12	. SPACER,PUSH SW:0.13 W X 0.375 INCH L,PLSTC	71590	J64285-00
-41	384-1136-00			7	EXTENSION SHAFT:0.95 INCH LONG	80009	384-1136-00
-42	----- -----			1	CKT BOARD ASSY:STORAGE SWITCH(SEE A14 EPL)		
					(ATTACHING PARTS)		
-43	211-0101-00			2	SCREW,MACHINE:4-40 X 0.25" 100 DEG,FLH STL	83385	OBD
					- - - * - - -		

http://manoman.sqhill.com

Fig. & Index No.	Tektronix Part No.	Serial/Model No. Eff	Dscont	Qty	1 2 3 4 5 Name & Description	Mfr Code	Mfr Part Number
3-	----- -----			-	. CKT BOARD ASSY INCLUDES:		
-44	211-0008-00			2	. SCREW,MACHINE:4-40 X 0.25 INCH,PNH STL	83385	OBD
-45	220-0651-00			2	. NUT,BLOCK:4-40 X 0.25 SQUARE X 0.45" LONG	80009	220-0651-00
-46	131-0608-00			29	. CONTACT,ELEC:0.365 INCH LONG	22526	47357
-47	136-0252-04			37	. CONTACT,ELEC:0.188 INCH LONG	22526	75060
	136-0252-04			9	. CONTACT,ELEC:0.188 INCH LONG	22526	75060
	136-0269-02			2	. SOCKET,PLUG-IN:14 CONTACT,LOW CLEARANCE	71785	133-5902-073
-48	260-1443-00			1	. SWITCH,PUSH:	80009	260-1443-00
-49	260-1444-00			1	. SWITCH,PUSH:	80009	260-1444-00
-50	361-0411-00			24	. SPACER,PUSH SW:0.13 W X 0.375 INCH L,PLSTC	71590	J64285-00
-51	386-2322-00			1	SUBPANEL,FRONT:	80009	386-2322-00
					(ATTACHING PARTS)		
-52	213-0068-00			3	SCR,TPG,THD CTG:4-40 X 0.50 INCH,PNL STL	83385	OBD
	211-0589-00			4	SCREW,MACHINE:6-32 X 0.312 INCH,PNH BRS	83385	OBD
					- - - * - - -		
-53	351-0295-02			3	GUIDE,SLIDE::	80009	351-0295-02
					(ATTACHING PARTS FOR EACH)		
-54	211-0105-00			1	SCREW,MACHINE:4-40 X 0.188"100 DEG,FLH STL	83385	OBD
	213-0088-00			1	SCR,TPG,THD CTG:4-24 X 0.25 INCH,PNH STL	83385	OBD
					- - - * - - -		
-55	426-0514-00			1	FRAME,MASK:PLASTIC	80009	426-0514-00
-56	378-0625-00			1	FILTER,LT,CRT:	80009	378-0625-00
-57	331-0258-03			1	MASK,CRT SCALE:	80009	331-0258-03
-58	200-0939-01			1	BEZEL,CRT:	80009	200-0939-01
					(ATTACHING PARTS)		
-59	212-0023-00			4	SCREW,MACHINE:8-32 X 0.375 INCH,PNH STL	83385	OBD
	131-1022-00	XB170000		2	CONTACT,ELEC:CRT MASK	80009	131-1022-00
					- - - * - - -		
-60	337-1159-00			1	WINDOW,OBS:4.78 X 3.93 X 0.07"PLSTC	80009	337-1159-00
-61	333-1691-00			1	PANEL,FRONT:LEFT	80009	333-1691-00
-62	----- -----	B919199	B170000	2	CKT BOARD ASSY:GRATICULE LIGHT(SEE A13 EPL)		
	----- -----			-	. EACH CKT BOARD ASSY INCLUDES:		
-63	378-0614-00	B010100	B170000	1	. REFLECTOR,LIGHT:MOLDED PLASTIC	80009	378-0614-00
-64	344-0179-00	B010100	B170000	2	. CLIP,REFL RTNG:PLASTIC	80009	344-0179-00
-65	211-0062-00	B010100	B170000	2	. SCREW,MACHINE:2-56 X 0.312 INCH,RDH STL	83385	OBD
-66	348-0031-00	B010100	B170000	2	GROMMET,PLASTIC:0.156 INCH DIA	80009	348-0031-00
-67	204-0380-00			1	BODY,TERMINAL:	80009	204-0380-00
-68	131-0765-00			3	CONTACT,ELEC:	80009	131-0765-00
-69	386-1884-03			1	SPRT,ELCTRN TUB:	80009	386-1884-03
					(ATTACHING PARTS)		
-70	212-0040-00			2	SCREW,MACHINE:8-32 X 0.375 100 DEG,FLH STL	83385	OBD
-71	211-0510-00			2	SCREW,MACHINE:6-32 X 0.312 INCH,PNH STL	83385	OBD
					- - - * - - -		
	----- -----			-	. SUPPORT INCLUDES:		
-72	386-1517-00			4	. SUPPORT,CRT:	80009	386-1517-00
-73	367-0138-00			2	HANDLE,BOW:U SHAPED	06540	14053-A-1032-1B
					(ATTACHING PARTS FOR EACH)		
-74	212-0518-00			2	SCREW,MACHINE:10-32 X 0.312 INCH,PNH STL	83385	OBD
					- - - * - - -		
-75	200-0103-00	XB040541		1	NUT,PLAIN,KNURL:0.25-28 X 0.375" OD,BRASS	80009	200-0103-00
-76	355-0131-00	XB040541		1	STUD,BDG POST:GROUND	80009	355-0131-00
					(ATTACHING PARTS)		
-77	212-0023-00	XB040541		1	SCREW,MACHINE:8-32 X 0.375 INCH,PNH STL	83385	OBD
-78	210-0008-00	XB040541		1	WASHER,LOCK:INTL,0.172 ID X 0.331"OD,STL	78189	1208-00-00-0541C
					- - - * - - -		
-79	384-1183-00	B010100	B159999	1	EXTENSION SHAFT:8.731 INCH LONG,OA	80009	384-1183-00
	384-1060-00	B160000		1	EXTENSION SHAFT:7.831 INCH LONG	80009	384-1060-00
	384-1136-00	B160000		1	EXTENSION SHAFT:0.95 INCH LONG	80009	384-1136-00
-80	210-0201-00			1	TERMINAL,LUG:SE #4	78189	2104-04-00-2520N
					(ATTACHING PARTS)		
-81	210-0586-00			1	NUT,PLAIN,EXT W:4-40 X 0.25 INCH,STL	78189	OBD
					- - - * - - -		

http://manoman.sqhill.com

Fig. & Index No.	Tektronix Part No.	Serial/Model No. Eff	Dscont	Qty	1 2 3 4 5 Name & Description	Mfr Code	Mfr Part Number
3-	644-0437-01	B010100	B159999	1	POWER SW ASSY:	80009	644-0437-01
	644-0056-00	B160000		1	POWER SW ASSY:	80009	644-0056-00
					(ATTACHING PARTS)		
-82	210-0586-00	XB160000		2	NUT,PLAIN,EXT W:4-40 X 0.25 INCH,STL	78189	OBD
					- - - * - - -		
-83	337-1760-00	B010100	B159999	1	. SHIELD,ELEC:POWER SWITCH	80009	337-1760-00
	200-1731-00	B160000		1	. COVER,ELEC SW:1.9 X 1.0 INCH	80009	200-1731-00
					(ATTACHING PARTS)		
-84	211-0021-00	B010100	B159999	1	. SCREW,MACHINE:4-40 X 1.25 INCH,PNH STL	83385	OBD
	211-0034-00	B160000		1	. SCREW,MACHINE:2-56 X 0.500 INCH,PNH,STL	77250	OBD
-85	220-0665-00	B010100	B159999	1	. NUT,PLAIN,HEX.:SLFLKG,4-40 X0.25",PLSTC	23050	NOTE
	210-0405-00	B160000		1	. NUT,PLAIN,HEX.:2-56 X 0.188 INCH,BRS	73743	2X12157-402
-86	210-0850-00	XB160000		1	. WASHER,FLAT:0.093 ID X 0.281 OD	12327	OBD
					- - - * - - -		
-87	260-1368-01	B010100	B159999	1	. SWITCH,PUSH:SPST,15A,250VAC	04426	23-1542
	260-1709-00	B160000		1	. SWITCH PUSH:POWER	77342	A9T5 762-6-3
					(ATTACHING PARTS)		
-88	211-0008-00	XB160000		2	. SCREW,MACHINE:4-40 X 0.25 INCH,PNH STL	83385	OBD
					- - - * - - -		
-89	407-1570-00	XB160000		1	. BRACKET,ANGLE:POWER SWITCH	80009	407-1570-00
	214-1226-01	B010100	B159999X	1	. SPRING,HLCPS:0.18 OD X 0.44 INCH LONG	80009	214-1226-01
	214-1689-00	B010100	B159999X	1	. ACTUATOR,SW:	80009	214-1689-00
	200-1318-00	B010100	B159999X	1	. COVER,SW ACTR:	80009	200-1318-00
-90	407-1653-00	XB160000		1	. BRACKET,ADAPTER:POWER SWITCH	80009	407-1653-00
					(ATTACHING PARTS)		
	210-0586-00	XB160000		1	NUT,PLAIN,EXT W:4-40 X 0.25 INCH,STL	78189	OBD
					- - - * - - -		
-91	200-1401-00			1	COVER,ACCESS:	80009	200-1401-00
					(ATTACHING PARTS)		
-92	211-0101-00			5	SCREW,MACHINE:4-40 X 0.25" 100 DEG,FLH STL	83385	OBD
					- - - * - - -		
-93	200-1448-00			1	COVER,ACCESS:	80009	200-1448-00
					(ATTACHING PARTS)		
-94	211-0101-00			6	SCREW,MACHINE:4-40 X 0.25" 100 DEG,FLH STL	83385	OBD
					- - - * - - -		
-95	351-0313-00			1	GUIDE,RACKMOUNT:19.218 INCH LONG,PAIR	80009	351-0313-00
					(ATTACHING PARTS)		
-96	210-0458-00			9	NUT,PLAIN,EXT W:8-32 X 0.344 INCH,STL	83385	OBD
					- - - * - - -		
-97	407-1145-01			1	BRKT,HEAT SINK:LEFT	80009	407-1145-01
					(ATTACHING PARTS)		
-98	211-0504-00			2	SCREW,MACHINE:6-32 X 0.25 INCH,PNH STL	83385	OBD
					- - - * - - -		
-99	220-0614-00			1	NUT BLOCK:6-32 X 0.347 X 0.375 X 1.25" L	80009	220-0614-00
					(ATTACHING PARTS)		
-100	211-0507-00			2	SCREW,MACHINE:6-32 X 0.312 INCH,PNH STL	83385	OBD
					- - - * - - -		
-101	386-2054-00			1	SUPPORT:POWER SUPPLY	80009	386-2054-00
					(ATTACHING PARTS)		
-102	211-0101-00			2	SCREW,MACHINE:4-40 X 0.25" 100 DEG,FLH STL	83385	OBD
					- - - * - - -		
-103	337-1731-00			1	SHIELD,ELEC:REGULATOR	80009	337-1731-00
					(ATTACHING PARTS)		
-104	211-0507-00			4	SCREW,MACHINE:6-32 X 0.312 INCH,PNH STL	83385	OBD
					- - - * - - -		
-105	----- -----			6	TRANSISTOR:		
					(ATTACHING PARTS FOR EACH)		
-106	211-0511-00			2	SCREW,MACHINE:6-32 X 0.50 INCH,PNH STL	83385	OBD
-107	386-0978-00			1	INSULATOR,PLATE:0.002 INCH MICA,FOR TO-3	80009	386-0978-00
					- - - * - - -		
-108	441-1060-01			1	CHAS,ELEC EQPT:MAIN	80009	441-1060-01
					(ATTACHING PARTS)		
-109	211-0538-00			1	SCREW,MACHINE:6-32 X 0.312"100 DEG,FLH STL	83385	OBD
-110	211-0507-00			2	SCREW,MACHINE:6-32 X 0.312 INCH,PNH STL	83385	OBD
-111	211-0025-00			2	SCREW,MACHINE:4-40 X 0.375 100 DEG,FLH STL	83385	OBD
					- - - * - - -		

http://manoman.sqhill.com

Fig. & Index No.	Tektronix Part No.	Serial/Model No. Eff	Dscont	Qty	1 2 3 4 5 Name & Description	Mfr Code	Mfr Part Number
3-112	----- -----			1	CKT BOARD ASSY:REGULATOR(SEE A12 EPL)		
	----- -----			-	. CKT BOARD ASSY INCLUDES:		
-113	131-0608-00			49	. CONTACT,ELEC:0.365 INCH LONG	22526	47357
-114	131-0847-00			12	. TERMINAL STUD:6-32 X 0.435 INCH LONG	80009	131-0847-00
-115	136-0183-00			3	. SOCKET,PLUG-IN:3 PIN	80009	136-0183-00
-116	136-0235-00			6	. SOCKET,PLUG-IN:6 CONTACT,ROUND	71785	133-96-12-062
-117	136-0252-04			36	. CONTACT,ELEC:0.188 INCH LONG	22526	75060
-118	136-0269-02			1	. SOCKET,PLUG-IN:14 CONTACT,LOW CLEARANCE	01295	C931402
-119	136-0361-00			6	. SOCKET,PLUG-IN:	80009	136-0361-00
	136-0384-00			12	. CONTACT,ELEC:FOR 0.04 DIAMETER PIN	00779	52120
-120	214-1291-00			3	. HEAT SINK,ELEC:XSTR,0.72 OD X 0.375"H	05820	207-AB
-121	344-0154-00			2	. CLIP,ELECTRICAL:FOR 0.25 INCH DIA FUSE	80009	344-0154-00
-122	351-0305-01			3	GUIDE,PLUG-IN:UPPER	80009	351-0305-01
					(ATTACHING PARTS FOR EACH)		
-123	211-0105-00			1	SCREW,MACHINE:4-40 X 0.188"100 DEG,FLH STL	83385	OBD
					- - - * - - -		
-124	437-0143-00	B010100	B060788	1	CABINET,SCOPE:	80009	437-0143-00
	437-0143-01	B060789		1	CABINET,SCOPE:	80009	437-0143-01
	----- -----			-	. CABINET INCLUDES:		
-125	210-0632-00	B010100	B060788X	6	. EYELET,METALLIC:0.089 OD X 0.125"LONG,BRS	01881	3168
-126	348-0274-00	B010100	B060788X	2	. SHLD GSKT,ELEC:24 INCHES LONG	80009	348-0274-00
	348-0354-00	XB060789		2	SHLD GSKT,ELEC:8.10 INCH LONG	80009	348-0354-00
-127	129-0441-00	XB050633		2	POST,ELEC-MECH:0.125 OD X 5.045 INCH LONG	80009	129-0441-00
					(ATTACHING PARTS FOR EACH)		
-128	211-0087-01	XB050633		2	SCREW,MACHINE:2-56 X 0.188" 82 DEG,FLH,STL	83385	OBD
					- - - * - - -		

http://manoman.sqhill.com

Fig. & Index No.	Tektronix Part No.	Serial/Model No. Eff	Dscont	Qty	1 2 3 4 5 Name & Description	Mfr Code	Mfr Part Number
4-1	407-1001-00			1	BRKT,CRT SHIELD:	80009	407-1001-00
					(ATTACHING PARTS)		
-2	211-0589-00			2	SCREW,MACHINE:6-32 X 0.312 INCH,PNH BRS	83385	OBD
-3	210-0457-00			2	NUT,PLAIN,EXT W:6-32 X 0.312 INCH,STL	83385	OBD
	211-0538-00			2	SCREW,MACHINE:6-32 X 0.312"100 DEG,FLH STL	83385	OBD
					- - - * - - -		
-4	348-0031-00			1	GROMMET,PLASTIC:0.156 INCH DIA	80009	348-0031-00
-5	348-0063-00			2	GROMMET,PLASTIC:0.50 INCH DIA	80009	348-0063-00
-6	348-0067-00			1	GROMMET,PLASTIC:0.312 INCH DIA	80009	348-0067-00
	672-0572-00	XB220000		1	CKT BOARD ASSY:PROTECTION AND READOUT	80009	672-0572-00
-7	----- -----	XB220000		1	. CKT BOARD ASSY:PROTECTION(SEE A17 EPL)		
-8	253-0162-00	XB220000		FT	. . TAPE,PRESS SENS:	04963	OBD
-9	131-0589-00	XB220000		20	. . CONTACT,ELEC:0.46 INCH LONG	22526	47350
-10	210-0702-00	XB220000		2	. EYELET,METALLIC:0.047 OD X 0.125 INCH LONG	07707	S6127
-11	----- -----			1	. CKT BOARD ASSY:READOUT(SEE A16 EPL)		
					(ATTACHING PARTS)		
-12	211-0008-00			1	. SCREW,MACHINE:4-40 X 0.25 INCH,PNH STL	83385	OBD
					- - - * - - -		
	----- -----			-	. . CKT BOARD ASSY INCLUDES:		
-13	131-0608-00			42	. . CONTACT,ELEC:0.365 INCH LONG	22526	47357
-14	131-1003-00			6	. . CONNECTOR BODY,:CKT BD MT,3 PRONG	80009	131-1003-00
-15	136-0252-04			51	. . CONTACT,ELEC:0.188 INCH LONG	22526	75060
-16	136-0260-02			14	. . SOCKET,PLUG-IN:16 CONTACT,LOW CLEARANCE	01295	C931602
-17	136-0269-00			3	. . SOCKET,PLUG-IN:14 CONTACT,LOW CLEARANCE	71785	133-59-02-073
-18	136-0235-00			1	. . SOCKET,PLUG-IN:6 CONTACT,ROUND	71785	133-96-12-062
-19	260-0723-00			1	. . SWITCH,SLIDE:DPDT,0.5A,125VAC	79727	GF126-0028
-20	214-0579-00	B010100	B219999	21	. . TERM.,TEST PT:0.40 INCH LONG	80009	214-0579-00
	214-0579-00	B220000		20	. . TERM.,TEST PT:0.40 INCH LONG	80009	214-0579-00
-21	----- -----			1	CKT BOARD ASSY:STORAGE(SEE A15 EPL)		
					(ATTACHING PARTS)		
-22	211-0008-00			4	SCREW,MACHINE:4-40 X 0.25 INCH,PNH STL	83385	OBD
-23	129-0236-00			2	POST,ELEC-MECH0.187" HEX	06540	9726-A-0440
					- - - * - - -		
	----- -----			-	. CKT BOARD ASSY INCLUDES:		
-24	131-0589-00			33	. CONTACT,ELEC:0.46 INCH LONG	22526	47350
-26	214-0579-00			5	. TERM.,TEST PT:0.40 INCH LONG	80009	214-0579-00
	200-1904-00	XB200000		1	. COVER,XSTR:PLASTIC		
	351-0179-00			1	GUIDE,CKT CARD:6.75 INCH LONG,PLASTIC	80009	351-0179-00
					(ATTACHING PARTS)		
	211-0101-00			2	SCREW,MACHINE:4-40 X 0.25" 100 DEG,FLH STL	83385	OBD
					- - - * - - -		
-27	441-1121-00			1	CHASSIS,SCOPE:	80009	441-1121-00
					(ATTACHING PARTS)		
-28	211-0008-00			4	SCREW,MACHINE:4-40 X 0.25 INCH,PNH STL	83385	OBD
-29	220-0665-00			4	NUT,PLAIN,HEX.:SLFLKG,4-40 X0.25",PLSTC	23050	OBD
					- - - * - - -		
-30	344-0147-00			2	CLIP,SPR,TNSN:CIRCUIT BOARD MOUNTING	80009	344-0147-00
					(ATTACHING PARTS FOR EACH)		
-31	211-0008-00			1	SCREW,MACHINE:4-40 X 0.25 INCH,PNH STL	83385	OBD
					- - - * - - -		
-32	119-0371-00			1	DELAY LINE,ELEC:	80009	119-0371-00
					(ATTACHING PARTS)		
	213-0034-00			2	SCR,TPG,THD CTG:4-40 X 0.188 INCH,PNH STL	83385	OBD
					- - - * - - -		
-33	----- -----			1	CKT BOARD ASSY:VERTICAL AMP(SEE A5 EPL)		
					(ATTACHING PARTS)		
-34	211-0008-00			4	SCREW,MACHINE:4-40 X 0.25 INCH,PNH STL	83385	OBD
					- - - * - - -		
	----- -----			-	. CKT BOARD ASSY INCLUDES:		
-36	131-0608-00			1	. CONTACT,ELEC:0.365 INCH LONG	22526	47357
-37	131-1003-00			1	. CONNECTOR BODY,:CKT BD MT,3 PRONG	80009	131-1003-00
-38	136-0252-04			28	. CONTACT,ELEC:0.188 INCH LONG	22526	75060
-39	214-0579-00			1	. TERM.,TEST PT:0.40 INCH LONG	80009	214-0579-00

http://manoman.sqhill.com

Fig. & Index No.	Tektronix Part No.	Serial/Model No. Eff	Dscont	Qty	1 2 3 4 5 Name & Description	Mfr Code	Mfr Part Number
4-40	----- -----			1	CTK BOARD ASSY:HORIZONTAL AMP(SEE A6 EPL)		
					(ATTACHING PARTS)		
-41	211-0008-00			2	SCREW,MACHINE:4-40 X 0.25 INCH,PNH STL	83385	OBD
					- - - * - - -		
	----- -----			-	. CKT BOARD ASSY INCLUDES:		
-42	131-0589-00			24	. CONTACT,ELEC:0.46 INCH LONG	22526	47350
-43	131-0608-00			2	. CONTACT,ELEC:0.365 INCH LONG	22526	47357
-44	136-0252-04	B010100	B221809	37	. CONTACT,ELEC:0.188 INCH LONG	22526	75060
	136-0252-04	B221810		21	. CONTACT,ELEC:0.188 INCH LONG	22526	75060
	136-0260-02	B221810		1	. SOCKET,PLUG-IN:16 CONTACT,LOW CLEARANCE	01295	C931602
-45	214-1292-00			4	. HEAT SINK,ELEC:TRANSISTOR	05820	205-AB
-46	214-0579-00			1	. TERM.,TEST PT:0.40 INCH LONG	80009	214-0579-00
-47	441-1081-01			1	CHAS,ELEC EQUIP:MAIN	80009	441-1081-01
					(ATTACHING PARTS)		
	211-0510-00			2	SCREW,MACHINE:6-32 X 0.312 INCH,PNH STL	83385	OBD
	210-0993-00			2	WSHR,SHOULDERED:0.143" ID X 0.75" OD,BRS	79807	OBD
-48	210-0457-00			1	NUT,PLAIN,EXT W:6-32 X 0.312 INCH,STL	83385	OBD
-49	211-0507-00			1	SCREW,MACHINE:6-32 X 0.312 INCH,PNH STL	83385	OBD
					- - - * - - -		
	----- -----			-	. CHASSIS ASSY INCLUDES:		
-50	351-0324-00			1	. GUIDE,CKT CARD:	80009	351-0324-00
-51	407-1136-00			1	. BRKT,COIL MTG:	80009	407-1136-00
					(ATTACHING PARTS)		
-52	211-0012-00			2	. SCREW,MACHINE:4-40 X 0.375 INCH,PNH STL	83385	OBD
-53	210-0201-00			2	. TERMINAL,LUG:SE #4	78189	2104-04-00-2520N
-54	210-0586-00			2	. NUT,PLAIN,EXT W:4-40 X 0.25 INCH,STL	78189	OBD
					- - - * - - -		
-55	343-0205-01			1	. RTNR,ELECTRON T:	80009	343-0205-01
					(ATTACHING PARTS)		
-56	211-0507-00			4	. SCREW,MACHINE:6-32 X 0.312 INCH,PNH STL	83385	OBD
					- - - * - - -		
-57	354-0347-00			1	. RING,CLP,CRT RE:	80009	354-0347-00
					(ATTACHING PARTS)		
-58	211-0170-00			2	. SCREW,MACHINE:4-40 X 2.75 INCH,PNH STL	83385	OBD
-59	214-1333-00			2	. SPRING,HLCPS:0.213 OD X 0.375 INCH LONG	80009	214-1333-00
					- - - * - - -		
-60	210-0627-00			2	RIVET,SOLID:0.042 DIA X 0.25 INCH,RDH	80009	210-0627-00
-61	343-0097-00			2	RTNR,TRANSISTOR:HEAT SINK	80009	343-0097-00
					(ATTACHING PARTS FOR EACH)		
-62	210-0599-00			2	NUT,SLEEVE:4-40 X 0.391 INCH LONG	80009	210-0599-00
-63	214-0368-00			1	SPRING,HLCPS:0.24 DIA X 0.438 INCH LONG	80009	214-0368-00
					- - - * - - -		
-64	352-0062-00			2	HOLDER,HEAT SK:1.187 X 1.187 INCHES,PLSTC	80009	352-0062-00
					(ATTACHING PARTS FOR EACH)		
-65	211-0008-00			2	SCREW,MACHINE:4-40 X 0.25 INCH,PNH STL	83385	OBD
-66	211-0012-00			2	SCREW,MACHINE:4-40 X 0.375 INCH,PNH STL	83385	OBD
-67	210-0406-00			4	NUT,PLAIN,HEX.:4-40 X 0.188 INCH,BRS	73743	2X12161-402
					- - - * - - -		
-68	337-1679-00			1	SHLD,ELCTRN TUB:	80009	337-1679-00
-69	----- -----			2	COIL:		
					(ATTACHING PARTS FOR EACH)		
-70	211-0504-00			1	SCREW,MACHINE:6-32 X 0.25 INCH,PNH STL	83385	OBD
					- - - * - - -		
	621-0467-00			1	POWER SUPPLY:HIGH VOLTAGE	80009	621-0467-00
					(ATTACHING PARTS)		
-71	211-0504-00			3	SCREW,MACHINE:6-32 X 0.25 INCH,PNH STL	83385	OBD
					- - - * - - -		
	----- -----			-	. HIGH VOLTAGE ASSY INCLUDES:		
-72	----- -----			1	. CKT BOARD ASSY:Z AXIS(SEE A10 EPL)		
					(ATTACHING PARTS)		
-73	211-0008-00			3	. SCREW,MACHINE:4-40 X 0.25 INCH,PNH STL	83385	OBD
					- - - * - - -		
	----- -----			-	. . CKT BOARD ASSY INCLUDES:		
-74	131-0589-00			45	. . CONTACT,ELEC:0.46 INCH LONG	22526	47350
-75	136-0252-04			21	. . CONTACT,ELEC:0.188 INCH LONG	22526	75060

http://manoman.sqhill.com

Fig. & Index No.	Tektronix Part No.	Serial/Model No. Eff	Dscont	Qty	1 2 3 4 5 Name & Description	Mfr Code	Mfr Part Number
4-76	344-0154-00			4	. . CLIP,ELECTRICAL:FOR 0.25 INCH DIA FUSE	80009	344-0154-00
-77	----- -----			1	. CKT BOARD ASSY:HIGH VOLTAGE(SEE A9 EPL)		
					(ATTACHING PARTS)		
-78	211-0008-00			6	. SCREW,MACHINE:4-40 X 0.25 INCH,PNH STL	83385	OBD
-79	220-0449-00			2	. NUT,SLEEVE:4-40 X 0.188 X 0.50" LONG	80009	220-0449-00
-80	211-0040-00			2	. SCREW,MACHINE:4-40 X 0.25",BDCH PLSTC	26365	OBD
-81	384-0536-00			2	. SPACER,SLEEVE:4-40 X 0.25 X0.531" LONG	80009	384-0536-00
					- - - * - - -		
	----- -----			-	. . CKT BOARD ASSY INCLUDES:		
-82	129-0072-00			1	. . INSULATOR,STDF:0.938 INCH LONG	80009	129-0072-00
-83	131-0589-00			5	. . CONTACT,ELEC:0.46 INCH LONG	22526	47350
	131-0608-00			17	. . CONTACT,ELEC:0.365 INCH LONG	22526	47357
-84	136-0252-04			24	. . CONTACT,ELEC:0.188 INCH LONG	22526	75060
-85	214-0579-00			1	. . TERM.,TEST PT:0.40 INCH LONG	80009	214-0579-00
-86	----- -----			1	. TRANSISTOR:		
					(ATTACHING PARTS)		
-87	213-0146-00			2	. SCR,TPG,THD FOR:6-20 X 0.313 INCH,PNH STL	83385	OBD
-88	386-0978-00			1	. INSULATOR,PLATE:0.002 INCH MICA,FOR TO-3	80009	386-0978-00
					- - - * - - -		
-89	136-0280-00			1	. SOCKET,PLUG-IN:FOR TO-3	22753	PTS1
					(ATTACHING PARTS)		
-90	211-0101-00			2	. SCREW,MACHINE:4-40 X 0.25" 100 DEG,FLH STL	83385	OBD
-91	210-0586-00			2	. NUT,PLAIN,EXT W:4-40 X 0.25 INCH,STL	78189	OBD
					- - - * - - -		
-92	348-0012-00			1	. GROMMET,RUBBER:	72653	1043-1M
-93	255-0334-00			1	. PLASTIC CHANNEL:12.75 INCHES LONG	80009	255-0334-00
	136-0509-00	B010100	B129999	1	. SOCKET,PLUG-IN:	80009	136-0509-00
	136-0509-01	B130000		1	SOCKET,PLUG-IN:	80009	136-0509-01
	----- -----			-	. . SOCKET ASSY INCLUDES:		
-94	343-0235-00			1	. . CLAMP,SOCKET:	80009	343-0235-00
-95	367-0117-00			1	. . PULL,SOC,PL-IN:	80009	367-0117-00
-96	200-0917-01			1	. . COV,ELECTRON TU:2.052 OD X 0.291" THK,PLSTC	80009	200-0917-01
-97	136-0304-02			1	. . SOCKET,PLUG-IN:CRT,14 PIN SOCKET,W/PINS	80009	136-0304-02
	131-0707-00			5	. . CONTACT,ELEC:0.48"L,22-26 AWG WIRE	22526	47439
	131-0621-00			5	. . CONTACT,ELEC:0.577"L,22-26 AWG WIRE	22526	46231
	352-0162-04			1	. . CONN BODY,PL,EL:4 WIRE YELLOW	80009	352-0162-04
	352-0202-05			1	. . CONN BODY,PL,EL:4 WIRE GREEN	80009	352-0202-05
-98	337-1680-00			1	. SHIELD,ELEC:POWER SUPPLY	80009	337-1680-00
-99	386-2411-00			1	SUPPORT,CRT:	80009	386-2411-00
					(ATTACHING PARTS)		
	211-0559-00			2	SCREW,MACHINE:6-32 X 0.375"100 DEG,FLH STL	83385	OBD
	210-0457-00			2	NUT,PLAIN,EXT W:6-32 X 0.312 INCH,STL	83385	OBD
					- - - * - - -		
-100	407-1186-00			1	BRACKET,CRT:	80009	407-1186-00
					(ATTACHING PARTS)		
-101	211-0510-00			4	SCREW,MACHINE:6-32 X 0.312 INCH,PNH STL	83385	OBD
-102	210-0457-00			2	NUT,PLAIN,EXT W:6-32 X 0.312 INCH,STL	83385	OBD
-103	210-0993-00			2	WSHR,SHOULDERED:0.143" ID X 0.75" OD,BRS	79807	OBD
					- - - * - - -		
-104	346-0077-00			1	STRAP,TIEDOWN E:	80009	346-0077-00
-105	358-0025-00	B010100	B040599	1	BSHG,STRAIN RLF:	28520	SR6P4
	358-0161-00	B040600		1	BSHG,STRAIN RLF:FOR 0.50 INCH HOLE,PLASTIC	28520	SR5P4
-106	161-0033-09			1	CABLE ASSY,PWR:3 WIRE,92 INCH LONG	16428	KH8035
-107	378-0041-01			1	FIL ELEM AIR:OILED	80009	378-0041-01
-108	200-1388-00			1	COVER,FUSE:	80009	200-1388-00
-109	352-0076-00			1	FUSEHOLDER:W/HARDWARE	75915	342012
-110	131-0955-00			6	CONNECTOR,RCPT,:BNC,FEMALE	24931	28JR200-1
					(ATTACHING PARTS FOR EACH)		
-111	210-0255-00			1	TERMINAL,LUG:0.391" ID INT TOOTH	80009	210-0255-00
					- - - * - - -		
-112	210-0202-00	B010100	B191672	1	TERMINAL,LUG:SE #6	78189	2104-06-00-2520N

http://manoman.sqhill.com

Fig. & Index No.	Tektronix Part No.	Serial/Model No. Eff	Dscont	Qty	1 2 3 4 5 Name & Description	Mfr Code	Mfr Part Number
4-	210-0202-00	B191673		2	TERMINAL,LUG:SE #6	78189	2104-06-00-2520N
					(ATTACHING PARTS)		
-113	211-0504-00	B010100	B191672	1	SCREW,MACHINE:6-32 X 0.25 INCH,PNH STL	83385	OBD
	211-0507-00	B191673		1	SCREW,MACHINE:6-32 X 0.312 INCH,PNH STL	83385	OBD
-114	210-0407-00	B010100	B191672	1	NUT,PLAIN,HEX.:6-32 X 0.25 INCH,BRS	73743	3038-0228-402
	210-0407-00	B191673		2	NUT,PLAIN,HEX.:6-32 X 0.25 INCH,BRS	73743	3038-0228-402
					- - - * - - -		
-115	210-0201-00			1	TERMINAL,LUG:SE #4	78189	2104-04-00-2520N
					(ATTACHING PARTS)		
-116	211-0008-00			1	SCREW,MACHINE:4-40 X 0.25 INCH,PNH STL	83385	OBD
					- - - * - - -		
-117	386-2401-00	B010100	B040599	1	PANEL,REAR:	80009	386-2401-00
	386-2401-02	B040600		1	PANEL,REAR:	80009	386-2401-02
					(ATTACHING PARTS)		
-118	211-0008-00	B010100	B040599	8	SCREW,MACHINE:4-40 X 0.25 INCH,PNH STL	83385	OBD
	211-0101-00	B040600		8	SCREW,MACHINE:4-40 X 0.25" 100 DEG,FLH STL	83385	OBD
					- - - * - - -		
-119	----- -----			1	CKT BOARD ASSY:OUTPUT SIGNALS(SEE A7 EPL)		
					(ATTACHING PARTS)		
-120	211-0008-00			2	SCREW,MACHINE:4-40 X 0.25 INCH,PNH STL	83385	OBD
					- - - * - - -		
	----- -----			-	. CKT BOARD ASSY INCLUDES:		
-121	131-0608-00			11	. CONTACT,ELEC:0.365 INCH LONG	22526	47357
-122	131-1003-00			2	. CONNECTOR BODY,:CKT BD MT,3 PRONG	80009	131-1003-00
-123	136-0252-04			27	. CONTACT,ELEC:0.188 INCH LONG	22526	75060
	136-0252-01			2	. CONTACT,ELEC:0.178 INCH LONG	00779	1-332095-2
-124	214-0579-00			1	. TERM.,TEST PT:0.40 INCH LONG	80009	214-0579-00
-125	260-0984-00			1	. SWITCH,SLIDE:DP3POSN,0.5A,125VAC-DC	79727	G-128SPC/7140
-126	119-0390-00			1	FAN,AXIAL:46 CFM,19W,115 VAC,60 HZ	28875	MBS-2107F-0-1
	119-0396-00			1	FAN,AXIAL:	28875	MBC2206F6
					(ATTACHING PARTS)		
	210-0457-00			4	NUT,PLAIN,EXT W:6-32 X 0.312 INCH,STL	83385	OBD
					- - - * - - -		
	614-0077-05			1	POWER SUPPLY:LOW VOLTAGE	80009	614-0077-05
					(ATTACHING PARTS)		
	212-0004-00			5	SCREW,MACHINE:8-32 X 0.312 INCH,PNH STL	83385	OBD
					- - - * - - -		
	----- -----			-	. POWER SUPPLY INCLUDES:		
-127	----- -----			1	. CKT BOARD ASSY:RECTIFIER(SEE A11 EPL)		
					(ATTACHING PARTS)		
-128	211-0507-00			2	. SCREW,MACHINE:6-32 X 0.312 INCH,PNH STL	83385	OBD
-129	210-0202-00			1	. TERMINAL,LUG:SE #6	78189	2104-06-00-2520N
-130	211-0511-00			2	. SCREW,MACHINE:6-32 X 0.50 INCH,PNH STL	83385	OBD
-131	343-0004-00			1	. CLAMP,LOOP:0.312 INCH DIAMETER,PLSTC	95987	5-16-6B
-132	210-0863-00			1	. WSHR,LOOP CLAMP:FOR 0.50" WIDE CLAMP,STL	95987	C191
	211-0008-00	XB030365		1	. SCREW,MACHINE:4-40 X 0.25 INCH,PNH STL	83385	OBD
					- - - * - - -		
	----- -----			-	. . CKT BOARD ASSY INCLUDES:		
-133	131-0608-00			31	. . CONTACT,ELEC:0.365 INCH LONG	22526	47357
-134	136-0252-04			6	. . CONTACT,ELEC:0.188 INCH LONG	22526	75060
-135	214-1292-00			2	. . HEAT SINK,ELEC:TRANSISTOR	05820	205-AB
-136	214-1731-00	B010100	B030364	1	. . HEAT SINK,ELEC:TRANSISTOR	80009	214-1731-00
	214-1731-01	B030365		1	. . HEAT SINK,ELEC:TRANSISTOR:TRANSISTOR	80009	214-1731-01
					(ATTACHING PARTS)		
-137	211-0012-00			1	. . SCREW,MACHINE:4-40 X 0.375 INCH,PNH STL	83385	OBD
-138	210-0935-00			1	. . WASHER,NONMETAL:FIBER,0.14 IDX 0.375"OD	74921	OBD
-139	210-0586-00			1	. . NUT,PLAIN,EXT W:4-40 X 0.25 INCH,STL	78189	OBD
					- - - * - - -		
-140	344-0154-00			4	. . CLIP,ELECTRICAL:FOR 0.25 INCH DIA FUSE	80009	344-0154-00
-141	----- -----			1	. TRANSFORMER:		
					(ATTACHING PARTS)		
-142	212-0522-00			2	. SCREW,MACHINE:10-32 X 2.50",HEX HD STL	83385	OBD
-143	210-0812-00			2	. WASHER,NONMETAL:#10,FIBER	06982	OBD

http://manoman.sqhill.com

Fig. & Index No.	Tektronix Part No.	Serial/Model No. Eff	Dscont	Qty	1 2 3 4 5 Name & Description	Mfr Code	Mfr Part Number
4-144	166-0457-00			2	. INSUL SLVG,ELEC:0.19 ID X 1.875"LONG MYLAR	80009	166-0457-00
-145	212-0023-00			2	. SCREW,MACHINE:8-32 X 0.375 INCH,PNH STL	83385	OBD
-146	210-0804-00			2	. WASHER,FLAT:0.17 ID X 0.375 INCH OD,STL	12327	OBD
-147	407-0921-00			1	. BRKT,XFMR MTG:	80009	407-0921-00
					- - - * - - -		
-148	----- -----			1	. SW,THERMOSTATIC:9SEE S1000 EPL)		
					(ATTACHINC PARTS)		
-149	211-0008-00			2	. SCREW,MACHINE:4-40 X 0.25 INCH,PNH STL	83385	OBD
-150	210-0586-00			2	. NUT,PLAIN,EXT W:4-40 X 0.25 INCH,STL	78189	OBD
					- - - * - - -		
-151	441-0993-01			1	. CHAS,ELEK EQPT:	80009	441-0993-01
	179-1637-00			1	. WIRING HARNESS,:POWER	80009	179-1637-00
	200-1075-00			4	. . COVER,ELEC CONN:PLASTIC	00779	1-480435-0
	131-0861-00			4	. . CONTACT,ELEC:QUICK DISCONNECT	00779	42617-2
-152	255-0334-00			FT	PLASTIC CHANNEL:12.75 INCHES LONG	80009	255-0334-00
-153	386-2410-00	B010100	B039999	1	SUBPANEL,REAR:	80009	386-2410-00
	386-2410-01	B040000		1	SUBPANEL,REAR:	80009	386-2410-01
-154	385-0149-00			1	INS,STANDOFF:4-40 X 0.25 INCH DIAMETER	80009	385-0149-00
					(ATTACHING PARTS)		
-155	211-0008-00			1	SCREW,MACHINE:4-40 X 0.25 INCH,PNH STL	83385	OBD
					- - - * - - -		
-156	----- -----			1	CKT BOARD ASSY:LOGIC(SEE A2 EPL)		
-157	131-0566-00			1	. LINK,TERM.CONNE:0.086 DIA X 2.375 INCH L	0000C	L-2007-1
-158	136-0235-00			1	. SOCKET,PLUG-IN:6 CONTACT,ROUND	71785	133-96-12-062
-159	136-0252-04			24	. CONTACT,ELEC:0.188 INCH LONG	22526	75060
-160	136-0260-02			1	. SOCKET,PLUG-IN:16 CONTACT,LOW CLEARANCE	01295	C931602
-161	136-0263-03			33	. CONTACT,ELEC:FOR 0.025 INCH SQUARE PIN	00779	86250-2
-162	136-0269-02			3	. SOCKET,PLUG-IN:14 CONTACT,LOW CLEARANCE	01295	C931402
-163	214-0579-00			4	. TERM.,TEST PT:0.40 INCH LONG	80009	214-0579-00
-164	----- -----			1	CKT BOARD ASSY:MAIN INTERFACE(SEE A1 EPL)		
					(ATTACHING PARTS)		
-165	213-0034-00			9	SCR,TPG,THD CTG:4-40 X 0.188 INCH,PNH STL	83385	OBD
					- - - * - - -		
	----- -----			-	. CKT BOARD ASSY INCLUDES:		
-166	131-0608-00			85	. CONTACT,ELEC:0.365 INCH LONG	22526	47357
	131-0591-00			32	. CONTACT,ELEC:0.835 INCH LONG	22526	47352
	131-0592-00			26	. CONTACT,ELEC:0.885 INCH LONG	22526	47353
-167	131-0840-00			1	. CONTACT,ELEC:GROUNDING	80009	131-0840-00
-168	129-0308-00			4	. POST,ELEC-MECH:HEX.,0.25 X 0.465 INCH LONG	80009	129-0308-00
					(ATTACHING PARTS FOR EACH)		
-169	211-0008-00			1	. SCREW,MACHINE:4-40 X 0.25 INCH,PNH STL	83385	OBD
					- - - * - - -		
-170	131-0805-00			2	. LINK,TERM.CONNE:J-SHAPE,0.90X0.82 X 0.312"	80009	131-0805-00
-171	131-1003-00			2	. CONNECTOR BODY,:CKT BD MT,3 PRONG	80009	131-1003-00
-172	136-0252-01	B010100	B141393	2	. CONTACT,ELEC:0.178 INCH LONG	00779	1-332095-2
	136-0252-04	B141394		2	. CONTACT,ELEC:0.188 INCH LONG	22526	75060
-173	214-1568-00			2	. PIN,GUIDE:	80009	214-1568-00
					(ATTACHING PARTS FOR EACH)		
-174	210-0406-00			1	. NUT,PLAIN,HEX.:4-40 X 0.188 INCH,BRS	73743	2X12161-402
-175	210-0054-00			1	. WASHER,LOCK:SPLIT,0.118 ID X 0.212"OD STL	83385	OBD
-176	344-0147-00			1	. CLIP,SPR,TNSN:CIRCUIT BOARD MOUNTING	80009	344-0147-00
					- - - * - - -		
-177	670-1374-00			1	. CKT BOARD ASSY:VERT INTERCONNECT	80009	670-1374-00
					(ATTACHING PARTS)		
-178	211-0008-00			2	. SCREW,MACHINE:4-40 X 0.25 INCH,PNH STL	83385	OBD
-179	351-0213-00			2	. GUIDE-POST,LOCK:0.285 INCH LONG	80009	351-0213-00
					- - - * - - -		
	----- -----			-	. . CKT BOARD ASSY INCLUDES:		
-180	131-0787-00			8	. . CONTACT,ELEC:0.64 INCH LONG	22526	47359
-181	386-1558-00			2	. SPACER,CKT BD:PLASTIC	80009	386-1558-00
	131-0767-00	B010100	B029999	1	. CONNECTOR,RCPT,:76 CONTACT	80009	131-0767-00
	131-0767-07	B030000		1	. CONNECTOR,RCPT,:PLUG-IN CKT BD,70 CONTACT	80009	131-0767-07
					(ATTACHING PARTS)		
-182	213-0232-00			2	. SCR,TPG,THD FOR:2-32 X 0.312 INCH,PNH STL	83385	OBD
-183	210-0906-00			1	. WASHER,NONMETAL:FIBER,0.125 ID X 0.203"OD	86445	OBD
					- - - * - - -		

http://manoman.sqhill.com

Fig. & Index No.	Tektronix Part No.	Serial/Model No. Eff	Dscont	Qty	1 2 3 4 5 Name & Description	Mfr Code	Mfr Part Number
4-	----- -----			-	. . CONNECTOR INCLUDES:		
-184	200-0950-00			2	. . COVER,ELEC CONN:PLASTIC	80009	200-0950-00
-185	131-0726-00	B010100	B029999	38	. . CONTACT,ELEC:STRAIGHT	80009	131-0726-00
	131-0726-00	B030000		35	. . CONTACT,ELEC:STRAIGHT	80009	131-0726-00
-186	131-0727-00	B010100	B029999	38	. . CONTACT,ELEC:OFFSET	80009	131-0727-00
	131-0727-00	B030000		35	. . CONTACT,ELEC:OFFSET	80009	131-0727-00
-187	204-0365-02			1	. . BODY,CONNECTOR:PLUG-IN CIRCUIT BOARD	80009	204-0365-02
	131-0767-02	B010100	B029999	2	. CONNECTOR,RCPT,:76 CONTACT	80009	131-0767-02
	131-0767-08	B030000		2	. CONNECTOR,RCPT,:PLUG-IN CKT BD,70 CONTACT	80009	131-0767-08
					(ATTACHING PARTS FOR EACH)		
-188	213-0232-00			2	. SCR,TPG,THD FOR:2-32 X 0.312 INCH,PNH STL	83385	OBD
					- - - * - - -		
	----- -----			-	. . EACH CONNECTOR INCLUDES:		
-189	200-0950-00			2	. . COVER,ELEC CONN:PLASTIC	80009	200-0950-00
-190	131-0726-00	B010100	B029999	36	. . CONTACT,ELEC:STRAIGHT	80009	131-0726-00
	131-0726-00	B030000		33	. . CONTACT,ELEC:STRAIGHT	80009	131-0726-00
-191	131-0727-00	B010100	B029999	36	. . CONTACT,ELEC:OFFSET	80009	131-0727-00
	131-0727-00	B030000		3	. . CONTACT,ELEC:OFFSET	80009	131-0727-00
-192	131-0899-00			4	. . CONTACT,ELEC:0.048 X 0.006 INCH THK	80009	131-0899-00
-193	204-0365-00			1	. . BODY,CONNECTOR:PLUG-IN CIRCUIT BOARD	80009	204-0365-00
-194	----- -----			1	CKT BOARD ASSY:TRIGGER SELECTOR(SEE A3 EPL)		
					(ATTACHING PARTS)		
-195	211-0008-00			2	SCREW,MACHINE:4-40 X 0.25 INCH,PNH STL	83385	OBD
					- - - * - - -		
	----- -----			-	. CKT BOARD ASSY INCLUDES:		
-196	136-0252-04			15	. CONTACT,ELEC:0.188 INCH LONG	22526	75060
-197	136-0260-01			1	. SOCKET,PLUG-IN:16 CONTACT,RECT SHAPE	71785	133-51-02-075
-198	136-0263-03			18	. CONTACT,ELEC:FOR 0.025 INCH SQUARE PIN	00779	86250-2
-199	----- -----			1	CKT BOARD ASSY:VERTICAL INTERFACE(SEE A4 EPL)		
					(ATTACHING PARTS)		
-200	211-0008-00			2	SCREW,MACHINE:4-40 X 0.25 INCH,PNH STL	83385	OBD
					- - - * - - -		
	----- -----			-	. CKT BOARD ASSY INCLUDES:		
-201	131-0589-00			4	. CONTACT,ELEC:0.46 INCH LONG	22526	47350
-202	136-0252-04			15	. CONTACT,ELEC:0.188 INCH LONG	22526	75060
-203	136-0260-02			1	. SOCKET,PLUG-IN:16 CONTACT,LOW CLEARANCE	01295	C931602
-204	136-0263-03			16	. CONTACT,ELEC:FOR 0.025 INCH SQUARE PIN	00779	86250-2
-205	131-0799-00			2	CONTACT,ELEC:	80009	131-0799-00
					(ATTACHING PARTS FOR EACH)		
-206	211-0008-00			1	SCREW,MACHINE:4-40 X 0.25 INCH,PNH STL	83385	OBD
-207	210-0586-00			1	NUT,PLAIN,EXT W:4-40 X 0.25 INCH,STL	78189	OBD
					- - - * - - -		
-208	131-0930-00			2	CONTACT,ELEC:PLUG-IN GROUND	80009	131-0930-00
					(ATTACHING PARTS FOR EACH)		
-209	211-0008-00			1	SCREW,MACHINE:4-40 X 0.25 INCH,PNH STL	83385	OBD
-210	210-0586-00			1	NUT,PLAIN,EXT W:4-40 X 0.25 INCH,STL	78189	OBD
					- - - * - - -		
-211	131-0800-00			2	CONTACT,ELEC:PLUG-IN GROUND	80009	131-0800-00
					(ATTACHING PARTS FOR EACH)		
-212	211-0008-00			2	SCREW,MACHINE:4-40 X 0.25 INCH,PNH STL	83385	OBD
-213	210-0586-00			2	NUT,PLAIN,EXT W:4-40 X 0.25 INCH,STL	78189	OBD
					- - - * - - -		
-214	407-0973-00			1	BRACKET,CONN:	80009	407-0973-00
					(ATTACHING PARTS)		
	211-0507-00			4	SCREW,MACHINE:6-32 X 0.312 INCH,PNH STL	83385	OBD
					- - - * - - -		
-215	179-1825-00			1	WIRING HARNESS,:VERTICAL SIGNAL	80009	179-1825-00
	131-0707-00			2	. CONTACT,ELEC:0.48"L,22-26 AWG WIRE	22526	47439
	131-0708-00			2	. CONTACT,ELEC:0.48"L,28-32 AWG WIRE	22526	47437
-216	210-0774-00			2	. EYELET,METALLIC:0.152 OD X 0.245 INCH L,BRS	80009	210-0774-00
-217	210-0775-00			2	. EYELET,METALLIC:0.126 OD X 0.23 INCH L,BRS	80009	210-0775-00
	352-0162-09			1	. CONN BODY,PL,EL:4 WIRE WHITE	80009	352-0162-09
	179-1826-00			1	WIRING HARNESS,:SWEEP GATE	80009	179-1826-00
	131-0707-00			8	. CONTACT,ELEC:0.48"L,22-26 AWG WIRE	22526	47439

http://manoman.sqhill.com

Fig. & Index No.	Tektronix Part No.	Serial/Model No. Eff	Dscont	Qty	1 2 3 4 5 Name & Description	Mfr Code	Mfr Part Number
4-	131-0708-00			8	. CONTACT,ELEC:0.48"L,28-32 AWG WIRE	22526	47437
	352-0166-03			2	. CONN BODY,PL,EL:8 WIRE ORANGE	80009	352-0166-03
	179-1991-00			1	WIRING HARNESS,:INSET	80009	179-1991-00
	131-0707-00			3	. CONTACT,ELEC:0.48"L,22-26 AWG WIRE	22526	47439
	131-0708-00			1	. CONTACT,ELEC:0.48"L,28-32 AWG WIRE	22526	47437
	352-0169-00			1	. CONN BODY,PL,EL:2 WIRE BLACK	80009	352-0169-00
	352-0169-05			1	. CONN BODY,PL,EL:2 WIRE,GREEN	80009	352-0169-05
-218	175-0825-00			FT	WIRE,ELECTRICAL:2 WIRE RIBBON	23499	TEK-175-0825-00
-219	175-0826-00			FT	WIRE,ELECTRICAL:3 WIRE RIBBON	08261	TEK-175-0826-00
-220	175-0827-00			FT	WIRE,ELECTRICAL:4 WIRE RIBBON	08261	TEK-175-0827-00
-221	175-0828-00			FT	WIRE,ELECTRICAL:5 WIRE RIBBON	23499	TEK-175-0828-00
-222	175-0829-00			FT	WIRE,ELECTRICAL:6 WIRE RIBBON	83501	TEK-175-0829-00
-223	175-0830-00			FT	WIRE,ELECTRICAL:7 WIRE RIBBON	08261	TEK-175-0830-00
-224	175-0831-00			FT	WIRE,ELECTRICAL:8 WIRE RIBBON	08261	TEK-175-0831-00
-225	175-0833-00			FT	WIRE,ELECTRICAL:10 WIRE RIBBON	23499	TEK-175-0833-00
	175-0855-00			FT	WIRE,ELECTRICAL:10 WIRE RIBBON	23499	TEK-175-0855-00
	175-0857-00			FT	WIRE,ELECTRICAL:8 WIRE RIBBON	23499	TEK-175-0857-00
-226	352-0171-00			1	CONN BODY,PL,EL:1 WIRE BLACK	80009	352-0171-00
	352-0171-03			1	CONN BODY,PL,EL:1 WIRE ORANGE	80009	352-0171-03
	352-0171-05			1	CONN BODY,PL,EL:1 WIRE GREEN	80009	352-0171-05
-227	352-0169-00			2	CONN BODY,PL,EL:2 WIRE BLACK	80009	352-0169-00
	352-0169-01	B010100	B169999	2	CONN BODY,PL,EL:2 WIRE BROWN	80009	352-0169-01
	352-0169-01	B170000		1	CONN BODY,PL,EL:2 WIRE BROWN	80009	352-0169-01
	352-0169-03			2	CONN BODY,PL,EL:2 WIRE ORANGE	80009	352-0169-03
	352-0169-04			2	CONN BODY,PL,EL:2 WIRE YELLOW	80009	352-0169-04
	352-0169-05			2	CONN BODY,PL,EL:2 WIRE,GREEN	80009	352-0169-05
	352-0169-06			2	CONN BODY,PL,EL:2 WIRE BLUE	80009	352-0169-06
	352-0169-07			2	CONN BODY,PL,EL:2 WIRE PURPLE	80009	352-0169-07
	352-0169-08			2	CONN BODY,PL,EL:2 WIRE GRAY	80009	352-0169-08
	352-0169-09			2	CONN BODY,PL,EL:2 WIRE WHITE	80009	352-0169-09
-228	352-0161-00			3	CONN BODY,PL,EL:3 WIRE BLACK	80009	352-0161-00
	352-0161-02			3	CONN BODY,PL,EL:3 WIRE RED	80009	352-0161-02
	352-0161-05	B010100	B169999	3	CONN BODY,PL,EL:3 WIRE GREEN	80009	352-0161-05
	352-0161-05	B170000		2	CONN BODY,PL,EL:3 WIRE GREEN	80009	352-0161-05
	352-0161-08			3	CONN BODY,PL,EL:3 WIRE GRAY	80009	352-0161-08
-229	352-0162-01	B010100	B169999	4	CONN BODY,PL,EL:4 WIRE BROWN	80009	352-0162-01
	352-0162-01	B170000		2	CONN BODY,PL,EL:4 WIRE BROWN	80009	352-0162-01
	352-0162-04			4	CONN BODY,PL,EL:4 WIRE YELLOW	80009	352-0162-04
	352-0162-05			4	CONN BODY,PL,EL:4 WIRE GREEN	80009	352-0162-05
	352-0162-09			4	CONN BODY,PL,EL:4 WIRE WHITE	80009	352-0162-09
-230	352-0163-00			5	CONN BODY,PL,EL:5 WIRE BLACK	80009	352-0163-00
	352-0163-03			5	CONN BODY,PL,EL:5 WIRE ORANGE	80009	352-0163-03
	352-0163-06			5	CONN BODY,PL,EL:5 WIRE BLUE	80009	352-0163-06
	352-0163-07			5	CONN BODY,PL,EL:5 WIRE VIOLET	80009	352-0163-07
	352-0163-08			5	CONN BODY,PL,EL:5 WIRE GRAY	80009	352-0163-08
-231	352-0164-00			6	CONN BODY,PL,EL:6 WIRE BLACK	80009	352-0164-00
	352-0164-02			6	CONN BODY,PL,EL:6 WIRE RED	80009	352-0164-02
	352-0164-06			6	CONN BODY,PL,EL:6 WIRE BLUE	80009	352-0164-06
	352-0164-07			6	CONN BODY,PL,EL:6 WIRE VIOLET	80009	352-0164-07
	352-0164-08			6	CONN BODY,PL,EL:GRAY	80009	352-0164-08
	352-0164-09			6	CONN BODY,PL,EL:6 WIRE WHITE	80009	352-0164-09
-232	352-0165-02			7	CONN BODY,PL,EL:7 WIRE RED	80009	352-0165-02
-233	352-0166-00			8	CONN BODY,PL,EL:8 WIRE BLACK	80009	352-0166-00
	352-0166-01			8	CONN BODY,PL,EL:8 WIRE BROWN	80009	352-0166-01
	352-0166-02			8	CONN BODY,PL,EL:8 WIRE RED	80009	352-0166-02
	352-0166-03			8	CONN BODY,PL,EL:8 WIRE ORANGE	80009	352-0166-03
	352-0167-06			9	CONN BODY,PL,EL:8 WIRE BLUE	80009	352-0167-06
-234	352-0168-00			10	CONN BODY,PL,EL:10 WIRE BLACK	80009	352-0168-00
	352-0168-05			10	CONN BODY,PL,EL:10 WIRE GREEN	80009	352-0168-05
	352-0168-07			10	CONN BODY,PL,EL:10 WIRE VIOLET	80009	352-0168-07
-235	131-0621-00			5	CONTACT,ELEC:0.577"L,22-26 AWG WIRE	22526	46231
-236	131-0707-00	B010100	B169999	430	CONTACT,ELEC:0.48"L,22-26 AWG WIRE	22526	47439
	131-0707-00	B170000		422	CONTACT,ELEC:0.48"L,22-26 AWG WIRE	22526	47439
-237	131-0472-01			4	CONTACT,ELEC:FEMALE	80009	131-0472-01

http://manoman.sghill.com

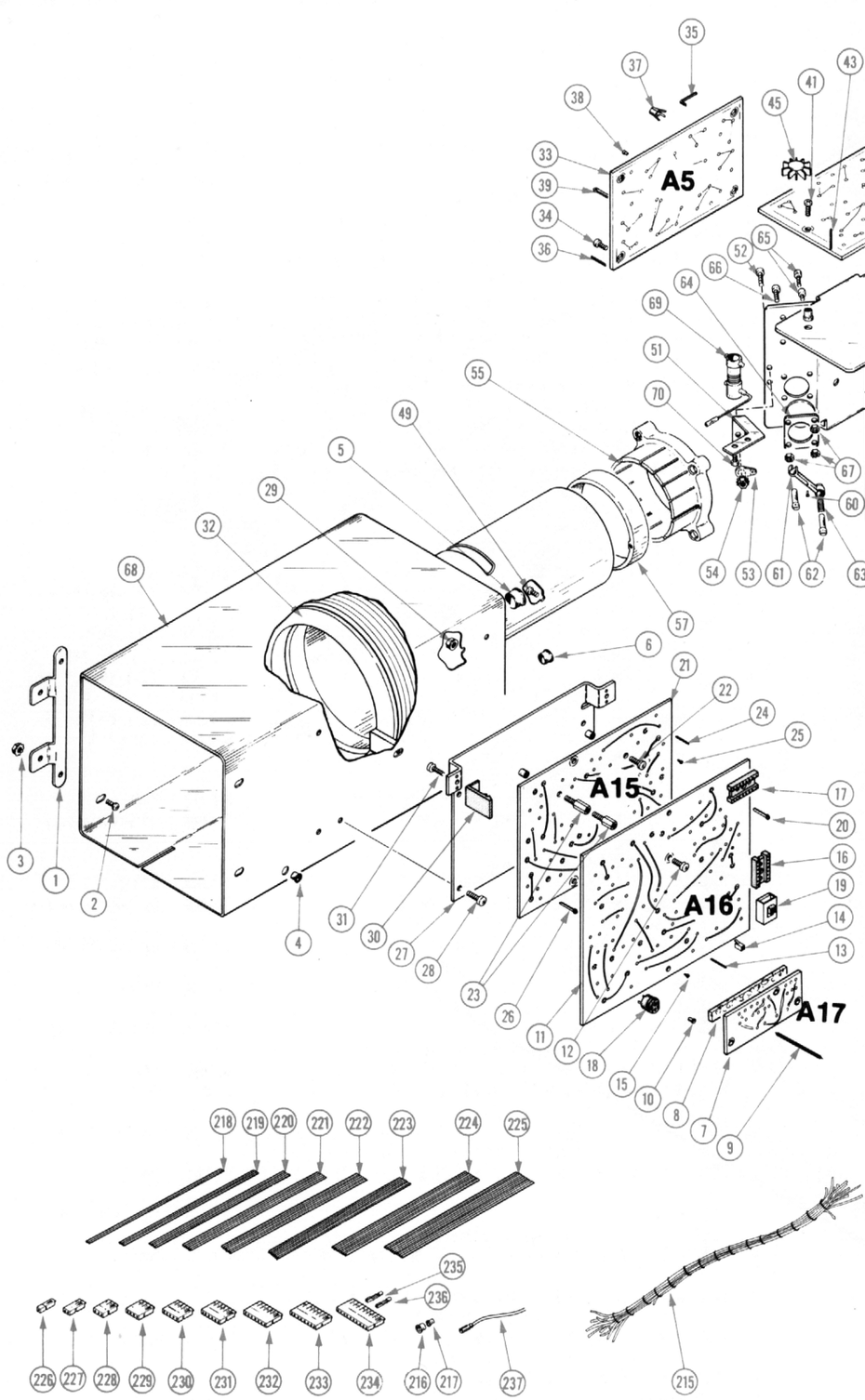

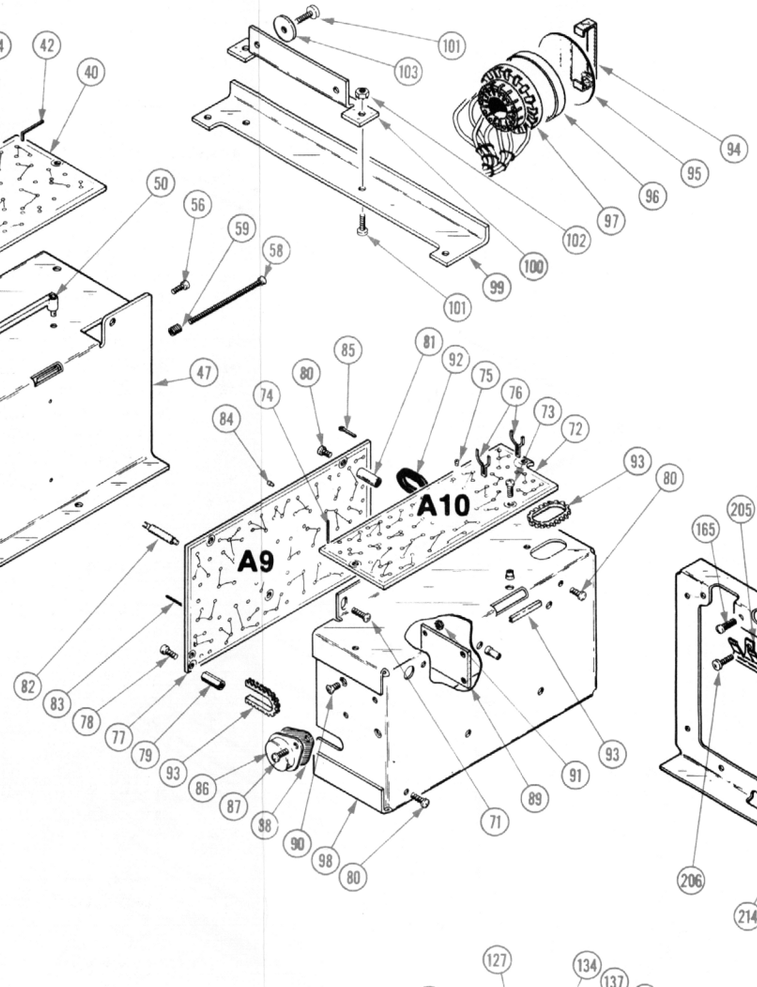

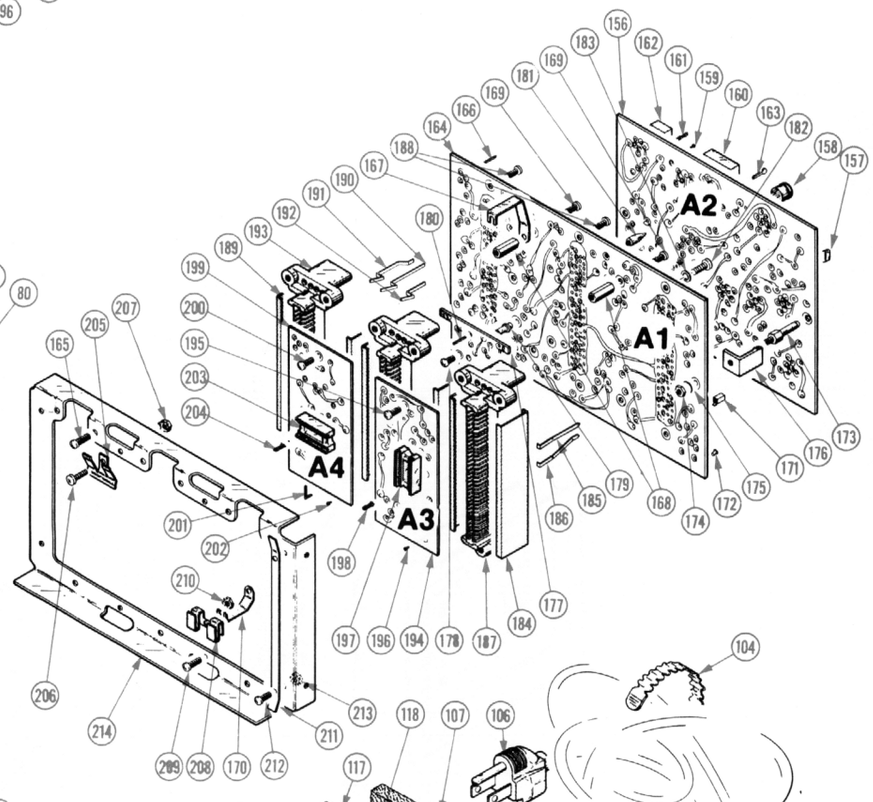

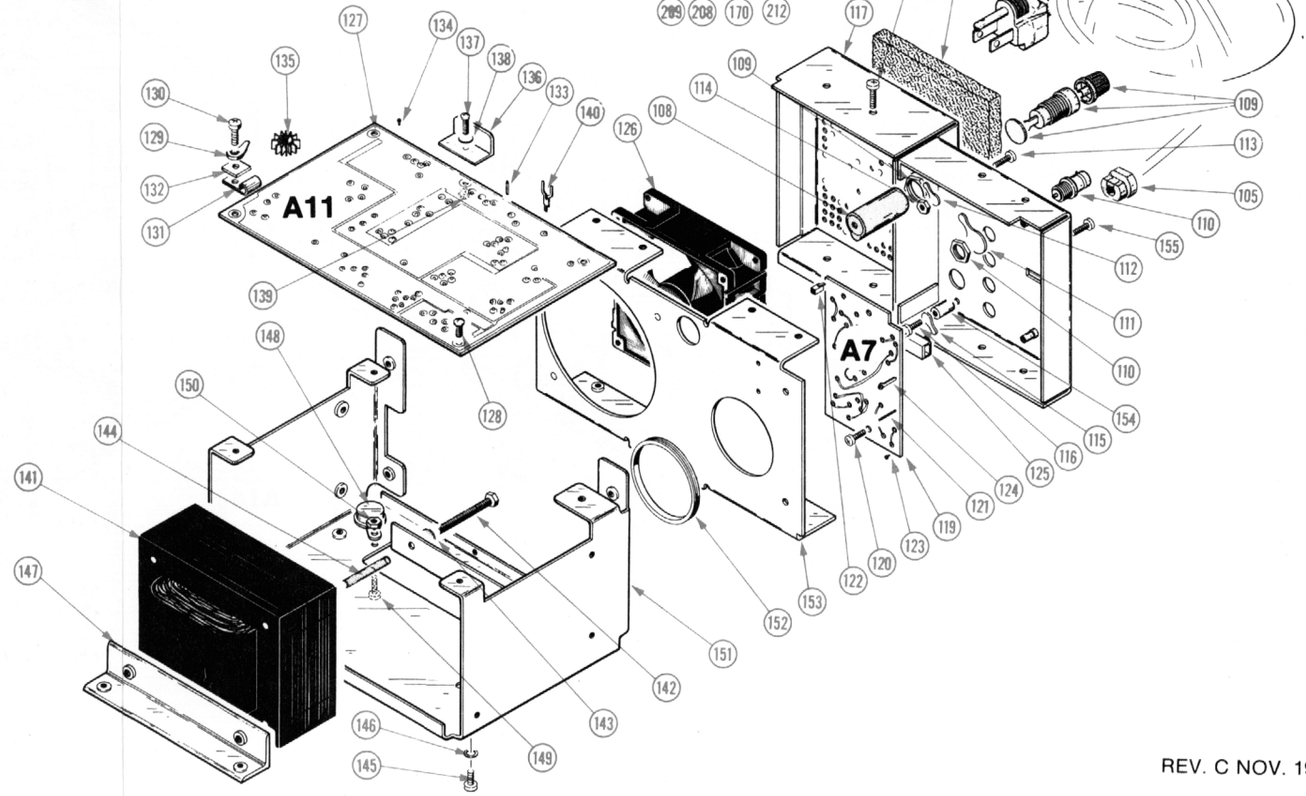

http://manoman.sqhill.com

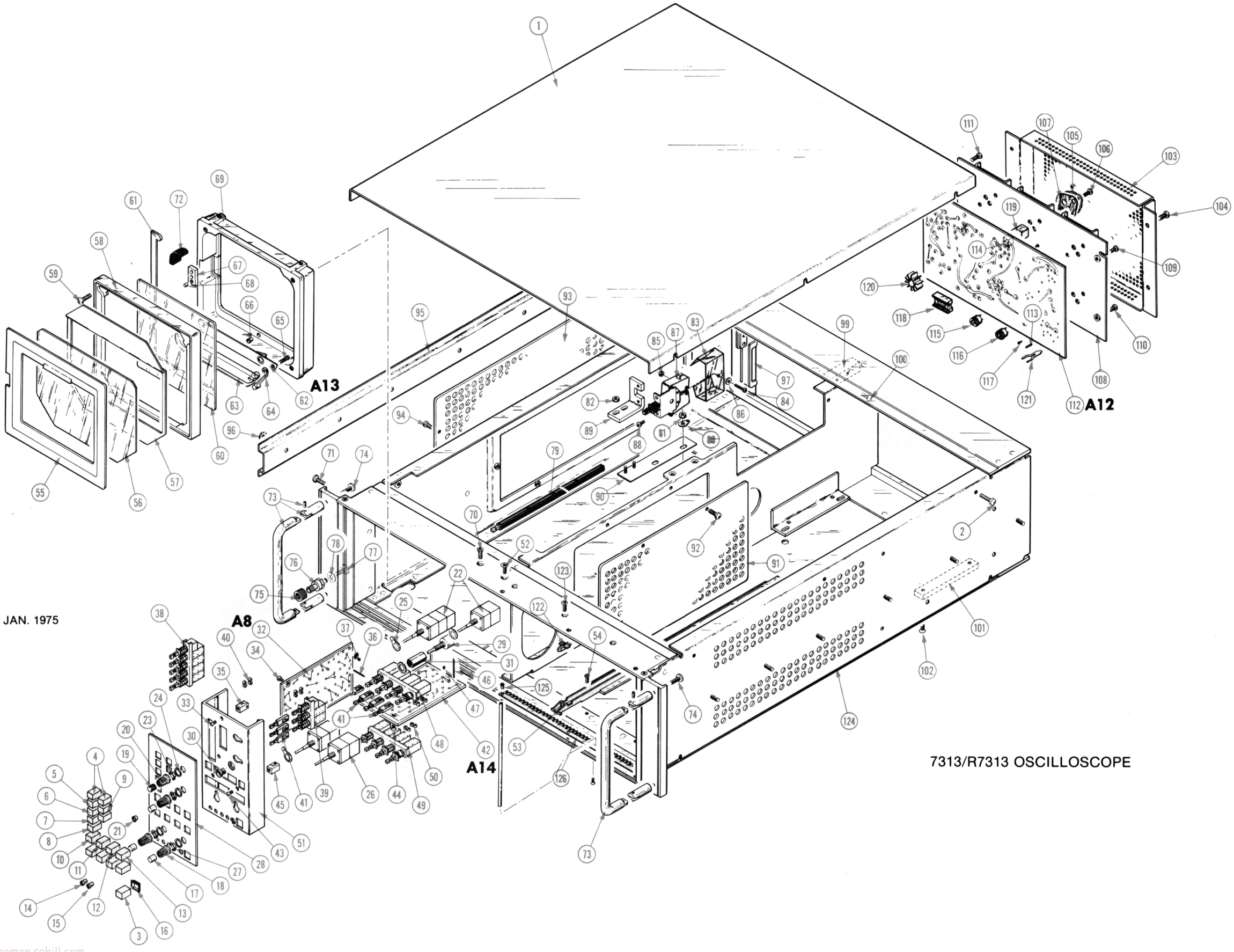

REV. B JAN. 1975

7313/R7313 OSCILLOSCOPE

http://manoman.sqhill.com

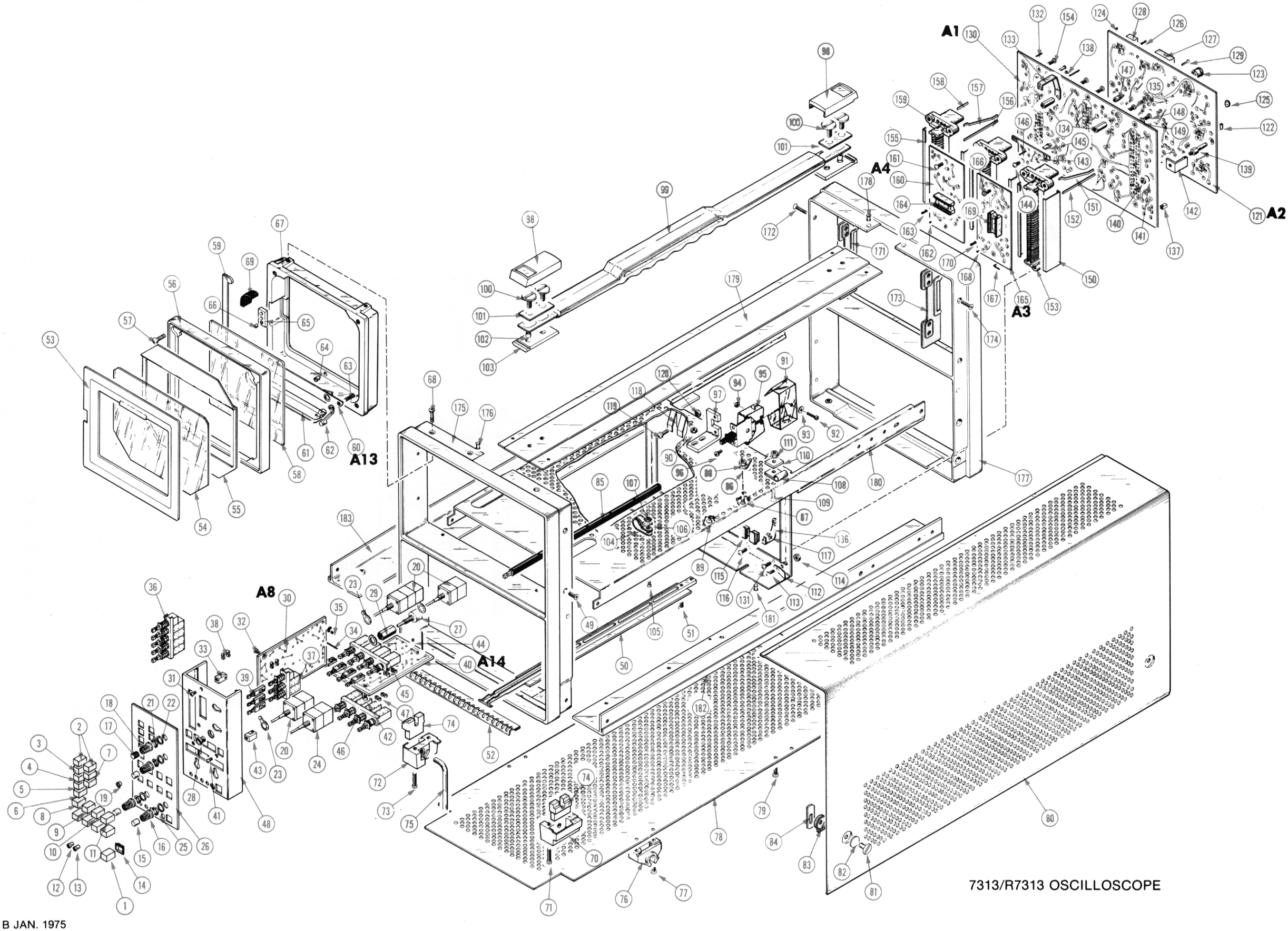

7313/R7313 OSCILLOSCOPE

REV. B JAN. 1975

http://manoman.sqhill.com

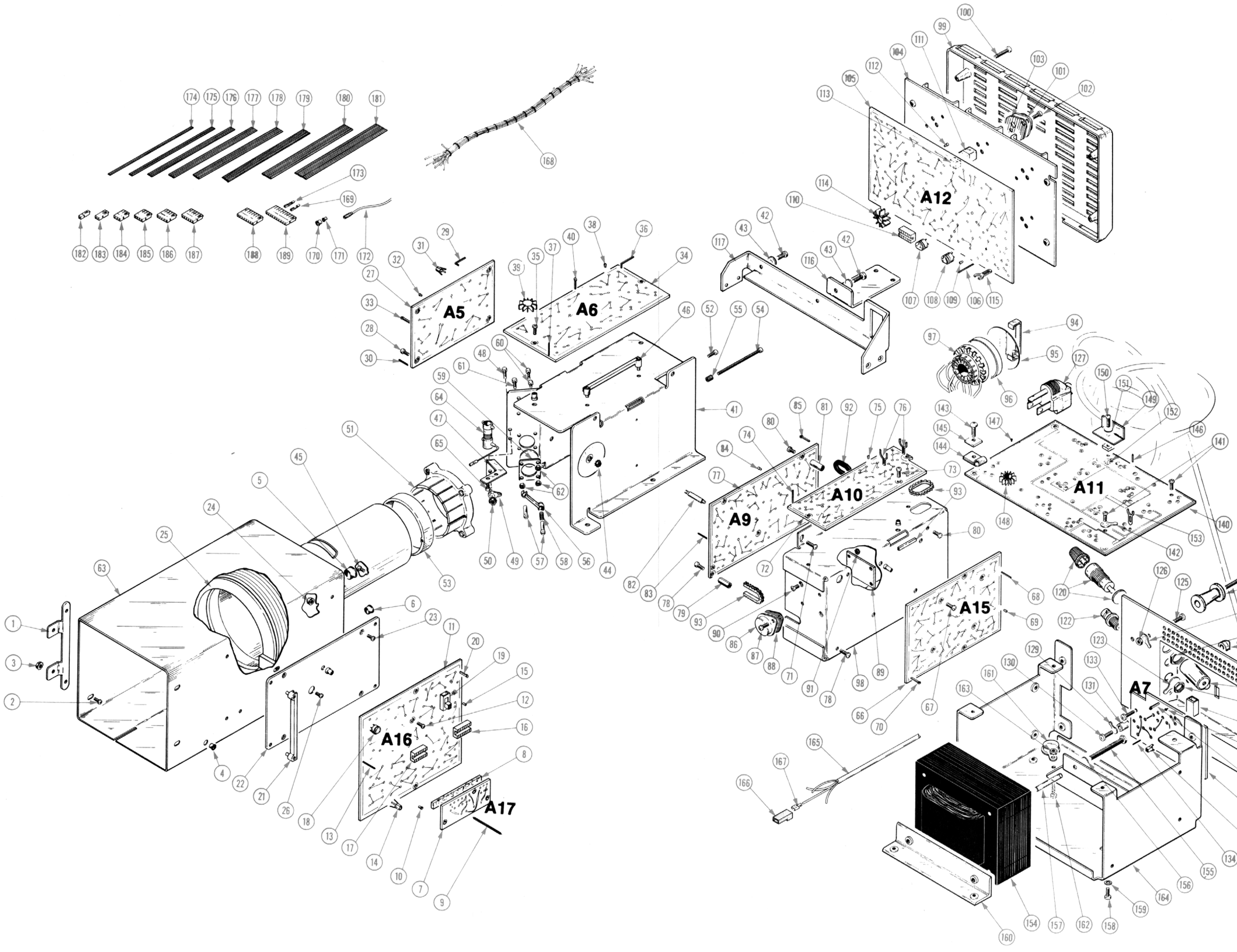

http://manoman.sqhill.com

REPLACEABLE PARTS FOR FACTORY INSTALLED OPTIONS

OPTION 7 Without Signals Out

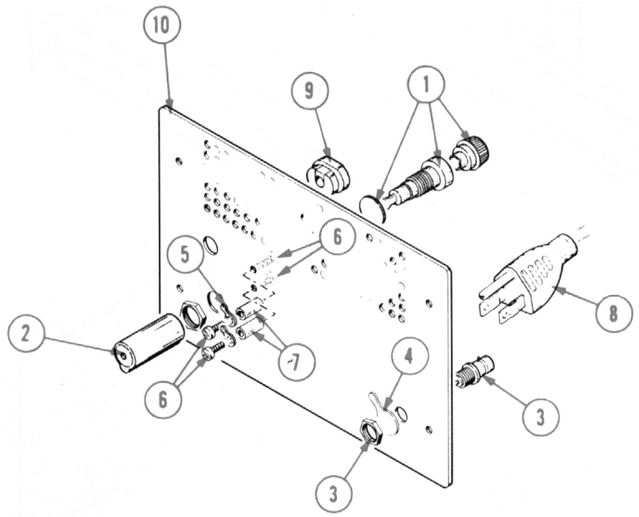

Fig. & Index No.	Tektronix Part No.	Serial/Model No. Eff	Dscont	Qty	1 2 3 4 5 Name & Description	Mfr Code	Mfr Part Number
5-1	352-0076-00			1	FUSEHOLDER:	75915	342012
-2	200-1388-00			1	COVER,FUSE:	80009	200-1388-00
-3	131-0955-00			1	CONNECTOR,RCPT:BNC FEMALE	24931	28JR200-1
-4	210-0255-00			1	TERMINAL,LUG:0.391 INCH DIA	80009	210-0255-00
-5	210-0201-00			2	TERMINAL,LUG:SE #4	78189	2104-04-00-2520N
-6	211-0008-00			4	SCREW,MACHINE:4-40 x 0.25 INCH,PNH STL	83385	OBD
-7	385-0149-00			2	INS STANDOFF:	80009	385-0149-00
-8	161-0033-09			1	CABLE ASSY,PWR:3 WIRE 92 INCH LONG	70903	KH8035
-9	358-0323-00			1	BSHG STRAIN RLF:	28520	SR15-1
-10	386-2329-00			1	PANEL,REAR:	80009	386-2329-00

OPTION 3 Electromagnetic Interference (EMI)

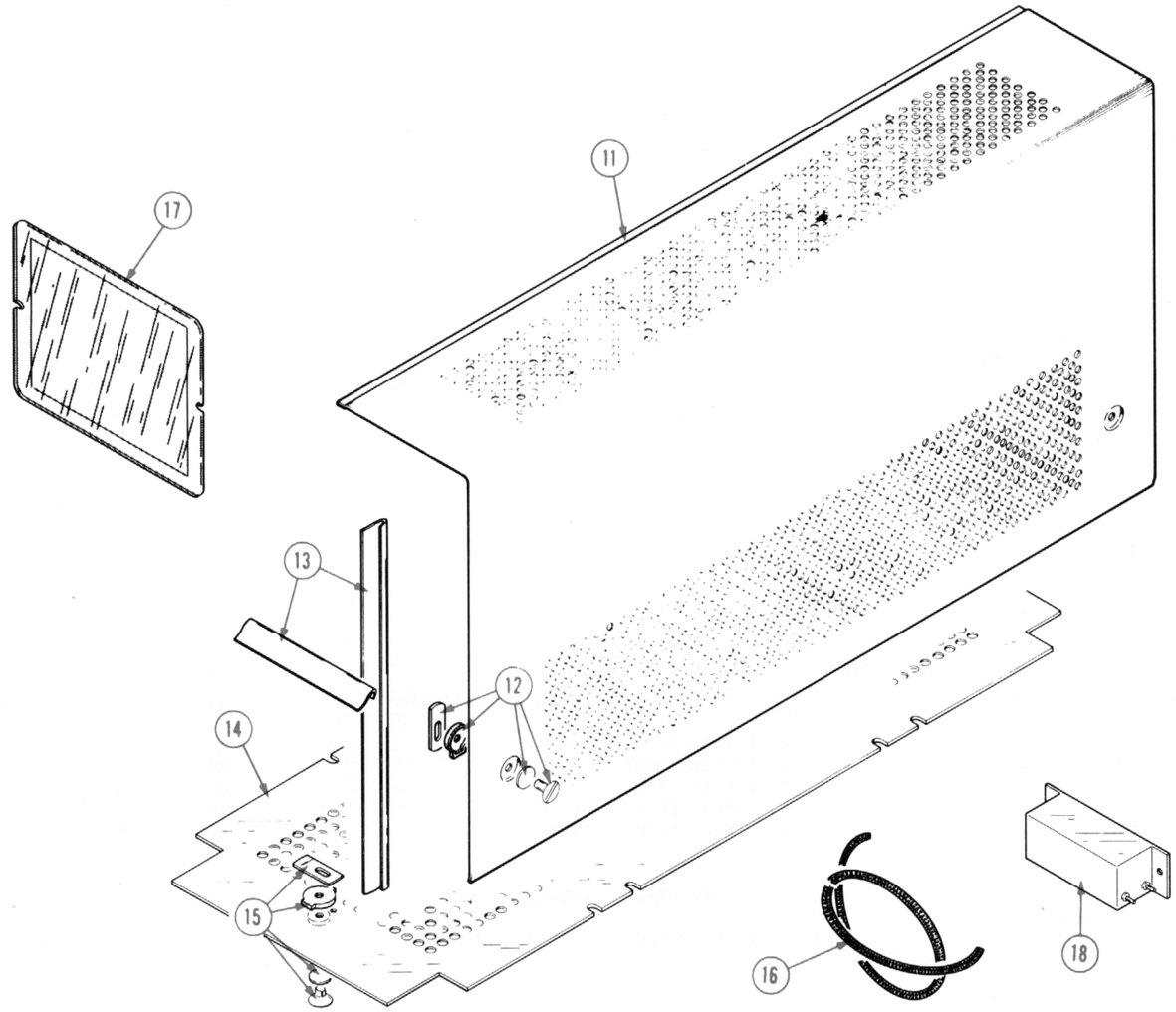

Fig. & Index No.	Tektronix Part No.	Serial/Model No. Eff	Dscont	Qty	1 2 3 4 5 Name & Description	Mfr Code	Mfr Part Number
5-11	390-0346-00			2	CABINET,SIDE:	80009	390-0346-00
	----- -----			-	EACH CABINET SIDE INCLUDES:		
-12	214-0816-00			6	LATCH ASSEMBLY:	80009	214-0816-00
-13	348-0274-00			4	SHLDG GSKT,ELECT:48 INCHES LONG	80009	348-0274-00
-14	348-0234-00			1	SHLDG GSKT,ELEC:39.50 INCHES LONG	80009	348-0234-00
-15	378-0696-00			1	FILTER,CRT:	80009	378-0696-00
-16	119-0113-05			1	FIL RAD INTE:	72982	9604-000-9000
-17	390-0355-00			1	CABINET BOTTOM:	80009	390-0355-00
					OPTIONAL ACCESSORY FOR EMI		
	016-0155-00			1	PLUG-IN PANEL:BLANK	80009	016-0155-00

http://manoman.sqhill.com

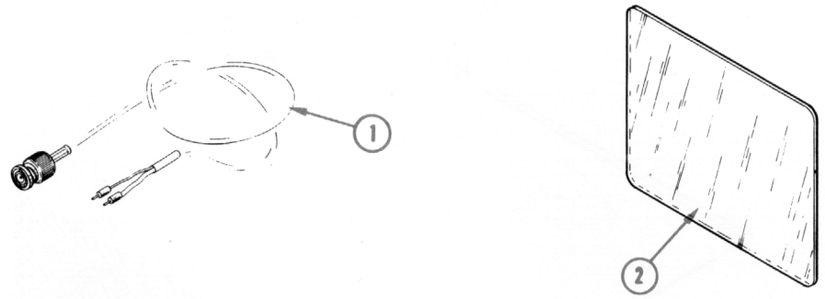

Fig. & Index No.	Tektronix Part No.	Serial/Model No. Eff	Dscont	Qty	1 2 3 4 5 Name & Description	Mfr Code	Mfr Part Number
6-1	175-1178-00			2	CABLE,SPL PURP:	80009	175-1178-00
-2	378-0625-01			1	FILTER,LIGHT:	80009	378-0625-01
	378-0625-08			1	FILTER,LIGHT:	80009	378-0625-08
	070-1362-00			1	MANUAL,TECH:OPERATOR'S	80009	070-1362-00
	070-1363-00			1	MANUAL,TECH:SERVICE	80009	070-1363-00
					OPTIONAL ACCESSORIES		
	348-0073-04			1	HINGE,BLOCK STA:WITH/GND POST	80009	348-0073-04

http://manoman.sqhill.com

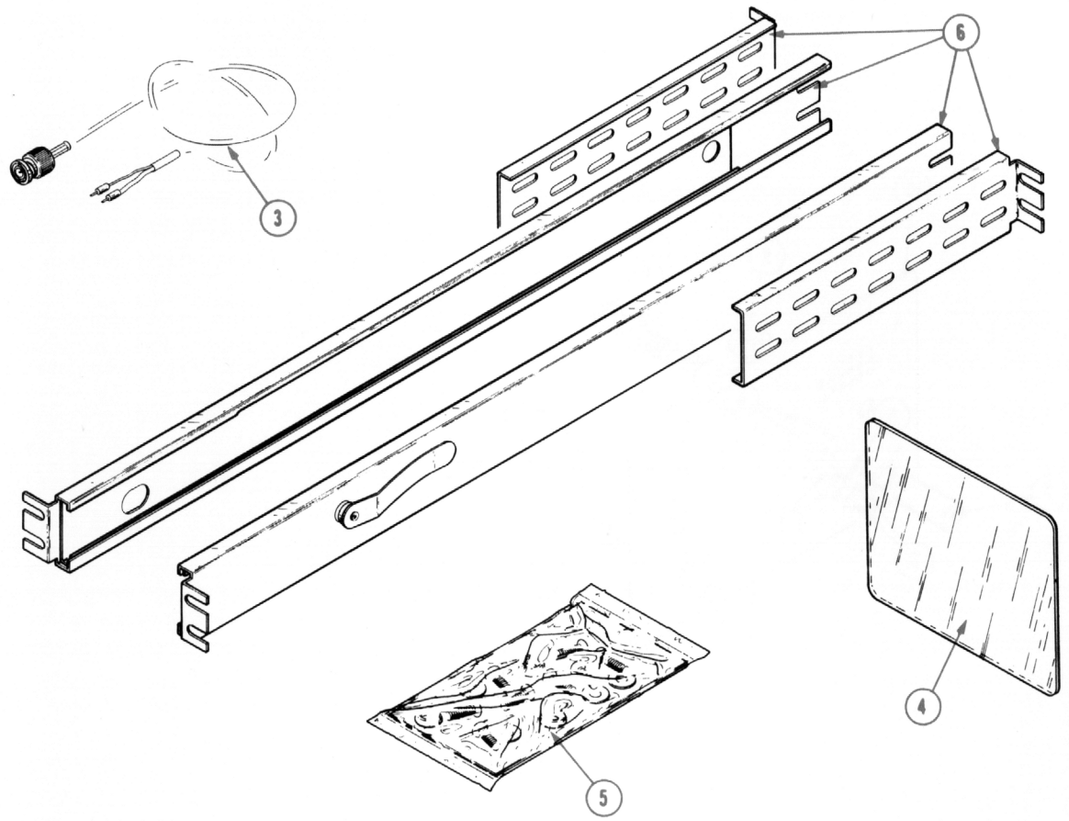

Fig. & Index No.	Tektronix Part No.	Serial/Model No. Eff	Dscont	Qty	1 2 3 4 5 Name & Description	Mfr Code	Mfr Part Number
6-3	175-1178-00			2	CABLE,SPL PURP:	80009	175-1178-00
-4	378-0625-01			1	FILTER,LIGHT:AMBER	80009	378-0625-01
	378-0625-08			1	FILTER,LIGHT:	80009	378-0625-08
-5	016-0131-00			1	HARDWARE KIT:	80009	016-0131-00
-6	351-0314-00			1	SLIDE-GUIDE:19.25 INCHES LONG	80009	351-0314-00
	070-1362-00			1	MANUAL,TECH:OPERATOR'S	80009	070-1362-00
	070-1363-00			1	MANUAL,TECH:SERVICE	80009	070-1363-00

7313 REPACKAGING

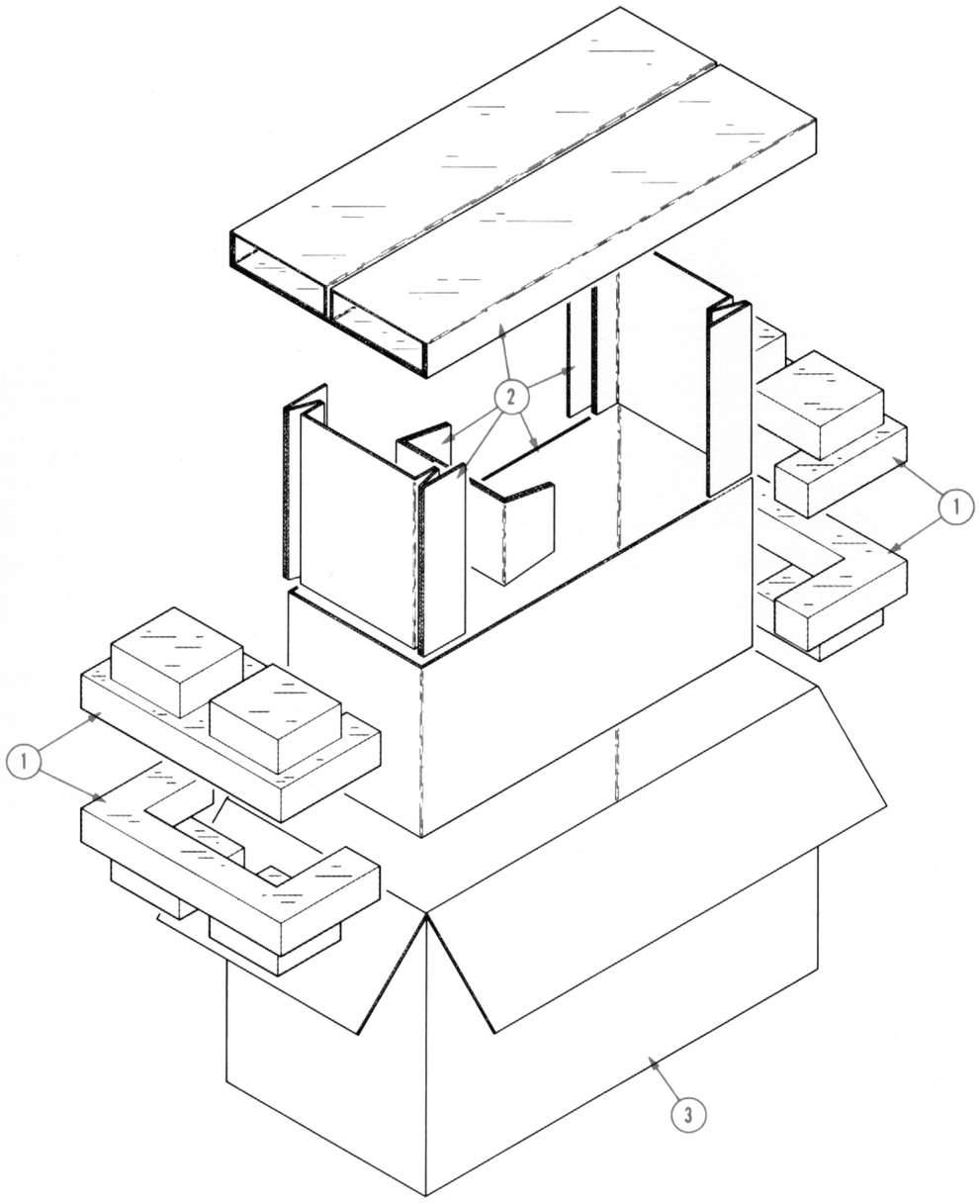

Fig. & Index No.	Tektronix Part No.	Serial/Model No. Eff	Dscont	Qty	1 2 3 4 5 Name & Description	Mfr Code	Mfr Part Number
7-	065-0154-00			1	CARTON ASSY:	80009	065-0154-00
	- - - - - -			-	CARTON ASSY INCLUDES:		
-1	004-0281-00			2	FRAME:	80009	004-0281-00
-2	004-1092-00			1	PAD SET:5 PIECE	80009	004-1092-00
-3	004-0766-00			1	CARTON:	80009	004-0766-00

R7313 REPACKAGING

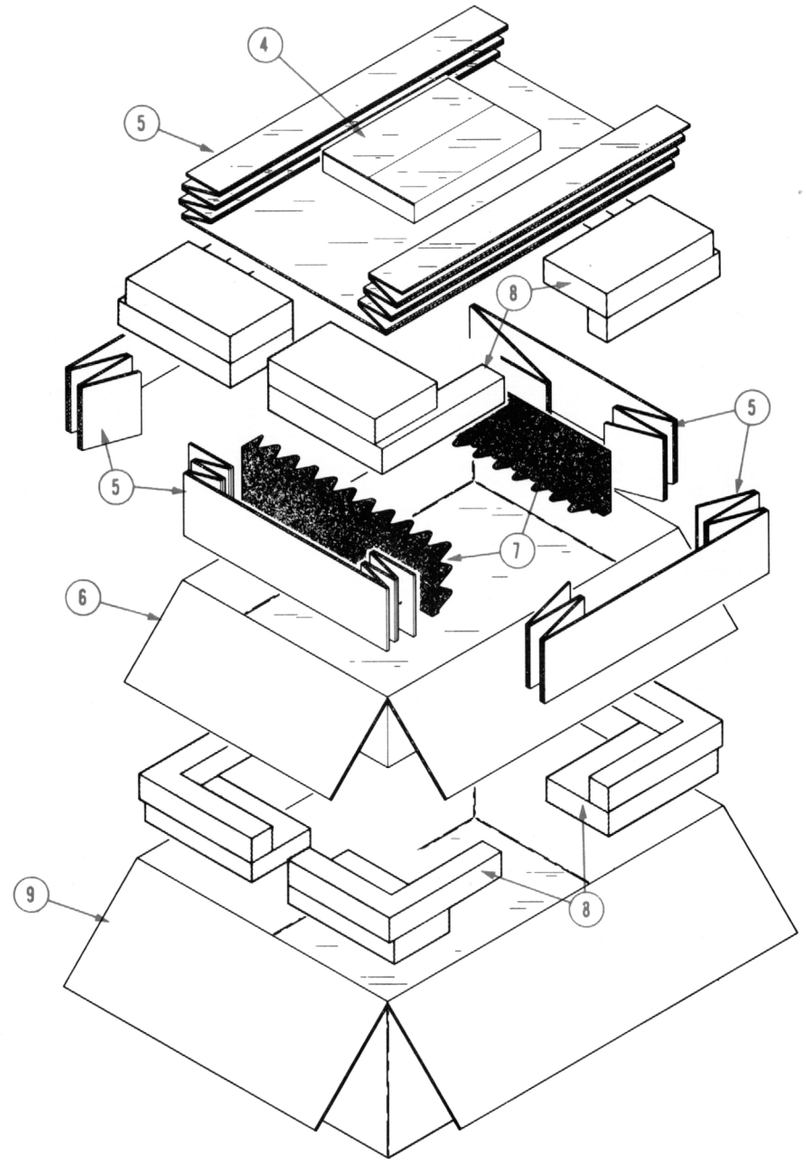

Fig. & Index No.	Tektronix Part No.	Serial/Model No. Eff	Dscont	Qty	1 2 3 4 5 Name & Description	Mfr Code	Mfr Part Number
7-	065-0181-00			1	CARTON ASSY:	80009	065-0181-00
	- - - - - -			-	CARTON ASSY INCLUDES:		
-4	004-0462-00			1	CARTON:ACCESSORY	80009	004-0462-00
-5	004-1160-00			1	PAD SET:5 PIECE	80009	004-1160-00
-6	004-0853-00			1	CARTON:INNER	80009	004-0853-00
-7	004-1210-00			1	PAD SET:2 PIECE	80009	004-1210-00
-8	004-0276-00			2	FRAME:	80009	004-0276-00
-9	004-0852-00			1	CARTON:OUTER	80009	004-0852-00

http://manoman.sqhill.com

CALIBRATION TEST EQUIPMENT REPLACEMENT

Calibration Test Equipment Chart

This chart compares TM 500 product performance to that of older Tektronix equipment. Only those characteristics where significant specification differences occur, are listed. In some cases the new instrument may not be a total functional replacement. Additional support instrumentation may be needed or a change in calibration procedure may be necessary.

Comparison of Main Characteristics

DM 501 replaces 7D13		
PG 501 replaces 107	PG 501 - Risetime less than 3.5 nsec into 50 Ω.	107 - Risetime less than 3.0 nsec into 50 Ω.
108	PG 501 - 5 V output pulse; 3.5 nsec Risetime.	108 - 10 V output pulse; 1 nsec Risetime.
111	PG 501 - Risetime less than 3.5 nsec; 8 nsec Pretrigger pulse delay.	111 - Risetime 0.5 nsec; 30 to 250 nsec Pretrigger Pulse delay.
114	PG 501 - ±5 V output.	114 - ±10 V output. Short proof output.
115	PG 501 - Does not have Paired, Burst, Gated, Delayed & Undelayed pulse mode; ±5 V dc Offset; short proof output. Has ±5 V output.	115 - Paired, Burst, Gated, Delayed & Undelayed pulse mode; ±10 V output. Short proof output.
PG 502 replaces 107		
108	PG 502 - 5 V output	108 - 10 V output.
111	PG 502 - Risetime less than 1 nsec; 10 nsec Pretrigger pulse delay.	111 - Risetime 0.5 nsec; 30 to 250 nsec Pretrigger pulse delay.
114	PG 502 - ±5 V output.	114 - ±10 V output. Short proof output.
115	PG 502 - Does not have Paired, Burst, Gated, Delayed & Undelayed pulse mode; ±5 V output. Short proof output.	115 - Paired, Burst, Gated, Delayed & Undelayed pulse mode; ±10 V output. Short proof output.
2101	PG 502 - Does not have Paired, Delayed, Undelayed and output locked mode; ±5 V output.	2101 - Paired, Delayed, Undelayed and output locked on mode; 10 V output.
PG 506 replaces 106	PG 506 - Positive-going trigger output signal at least 1 V; High Amplitude, 60 V output.	106 - Positive and Negative-going trigger output signal, 50 nsec and 1 V; High Amplitude output, 100 V.
067-0502-01	PG 506 - Does not have chopped feature.	0502-01 - Comparator output can be alternately chopped to a reference voltage.
SG 503 replaces 190, 190A, 190B	SG 503 - Amplitude range 5 mV to 5.5 V p-p.	190B - Amplitude range 40 mV to 10 V p-p.
191	SG 503 - Frequency range 250 kHz to 250 MHz.	191 - Frequency range 350 kHz to 100 MHz.
067-0532-01	SG 503 - Frequency range 250 kHz to 250 MHz.	0532-01 - Frequency range 65 MHz to 500 MHz.
TG 501 replaces 180, 180A	TG 501 - Marker outputs, 5 sec to 1 ns. Sinewave available only at 5,2, and 1 ns. Trigger output - slaved to marker output from 5 sec through 100 ns. Only one time-mark can be generated.	180A - Marker outputs, 5 sec to 1 μs. Sinewave available at 5, 10, and 50 MHz. Trigger pulses 1, 10, 100 Hz; 1,10, and 100 kHz. Multiple time-marks can be stacked.
181	TG 501 - Marker outputs, 5 sec to 1 ns. Sinewave available only at 5, 2, and 1 ns.	181 - Marker outputs, 1, 10, 100, 1000, and 10,000, plus 10 MHz sinewave.
2901	TG 501 - Marker outputs, 5 sec to 1 ns. Sinewave available only at 5, 2, and 1 ns. Trigger output - slaved to marker output from 5 sec through 100 ns. Only one time-mark can be generated.	2901 - Marker outputs, 5 sec to 0.1 μs. Sinewave available at 5, 10, and 50 ns. Separate trigger pulses, from 5 sec to 0.1 μs. Multiple time-marks can be stacked.

@

http://manoman.sqhill.com

TEKTRONIX®
committed to technical excellence

MANUAL CHANGE INFORMATION

PRODUCT See below

CHANGE REFERENCE M24,381

DATE 3-5-76

CHANGE:	DESCRIPTION

7313 EFF SN B250000-up (070-1363-00)

7603 EFF SN B310000-up (070-1429-00)

7613 EFF SN B330000-up (070-1463-00)

7623A EFF SN B140000-up (070-1685-00)

7633 EFF SN B160000-up (070-1767-00)

ELECTRICAL PARTS LIST AND SCHEMATIC CHANGE

CHANGE TO:

Q872	151-0407-00	TRANSISTOR:SILICON,NPN,150V
R957	315-0510-00	RES.,FXD,CMPSN:51 OHM,5%,0.25W

The above parts are shown on the LV POWER SUPPLY diagram.

http://manoman.sqhill.com